MiCable

Test
Product Catalog

5G

Chip

T&M

MW&
MMW

High
Power

EMC

www.micable.cn

CONTENTS

01
Wideband / Ultra Wideband Passive Components

- Ultra Wideband Power Divider/Combiner 02
- Ultra Wideband Directional/Dual-directional Coupler 05
- High Power Directional/Dual-directional Coupler 08
- Ultra Wideband 90°/180° Hybird 12
- High Power Bi-directional Coupling Detector 13
- Precision RF Microwave Coaxial Adapters 14
- Precision Fixed Attenuators 17
- Precision Terminations 18

02
Wideband / Ultra Wideband Switch

- Solid State Switch 20
- Mechanical Switch 26

03
Wideband / Ultra Wideband Switch Matrix

- Mechanical Switch Matrix 28
- Solid State Switch Matrix 31

04
Wideband / Ultra Wideband Amplitude & Phase Controller Products

- Ultra Wideband High Accuracy Programmable Attenuator 33
- Ultra Wideband High Accuracy Programmable Phase Shifter 39
- High Accuracy Programmable Amplitude & Phase Controller 43
- Multi-Channel High Accuracy Amplitude & Phase Control Matrices 48
- 8-Channel High Accuracy Fading Simulator 49
- Ultra Wideband High Accuracy Beamforming Butler Matrices 50

05
Wideband / Ultra Wideband Microwave Millimeter Wave Amplifier

- High Gain Wideband Microwave Millimeter Wave Amplifier Module 52
- Microwave Millimeter Wave Power Amplifier 53

06
Wideband / Ultra Wideband Signal Source

- Ultra Wideband Fast Arbitrary Modulation Vector Signal Source 55

07
Test Cable Assemblies

- Flexible Test Cable Assemblies 58
- Test Cable Assemblies for Vector Network Analyzer 74

01

Wideband/Ultra Wideband Passive Components

Ultra Wideband Power Divider/Combiner

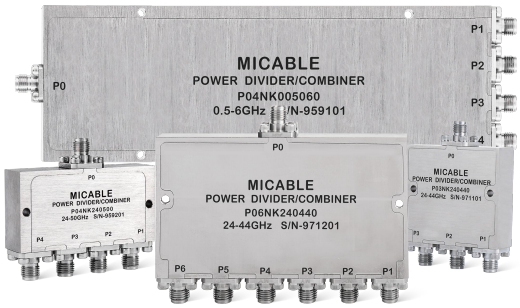

- Frequency range 0.3-67GHz
- Low VSWR / low insertion loss / high isolation
- Excellent phase & amplitude unbalance
- High power handling
- Environment conditions meet MIL-STD-202F
- Different types of connectors, custom designs & narrow bands are available

Test curve of P04N240440

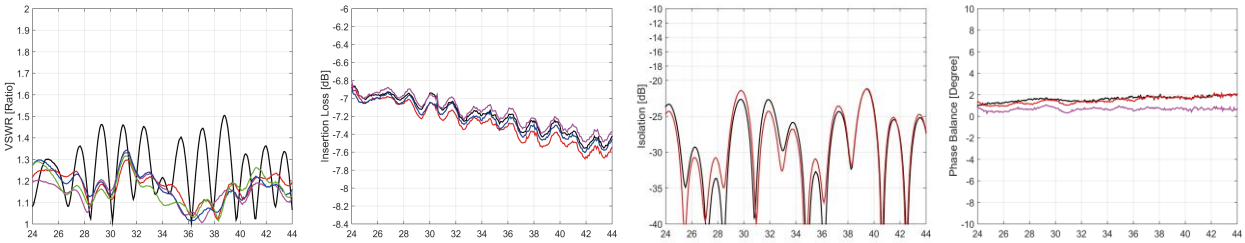

Specifications

Freq. Range (GHz)	P/N	Way	Sum VSWR (:1) Max.	Distri. VSWR (:1) Max.	Insertion Loss* (dB) Max.	Amp. Unbal. (dB) Max.	Phase Unbal. (Deg.) Max.	Isolation (dB) Min.	FOR (W) Max.	REV** (W) Max.
0.3-18	P02N003180	2	1.5	1.5	2.4	±0.3	±4	17	30	5
	P04N003180	4	1.5	1.5	5.9	±0.4	±5	16	30	5
0.3-67	P02N003670	2	1.9	1.9	8.2	±0.7	±9	16	12	1
0.45-6	P02T00450600	2	1.4	1.3	0.9	±0.3	±4	17	30	1
	P04T00450600	4	1.4	1.3	1.6	±0.4	±5	17	30	1
	P08T00450600	8	1.5	1.4	2.2	±0.5	±7	16	30	1
	P16N00450600	16	1.6	1.4	3.8	±0.5	±6	16	30	1
0.45-8	P02N00450800	2	1.4	1.4	1.2	±0.2	±3	18	30	5
	P04N00450800	4	1.4	1.4	2.4	±0.3	±4	18	30	5
	P08N00450800	8	1.5	1.5	3.9	±0.4	±5	16	30	5
	P16N00450800	16	1.6	1.5	4.8	±0.5	±7	16	30	5
0.5-26.5	P02N005265	2	1.5	1.5	2.4	±0.4	±4	17	30	2
	P03N005265	3	1.5	1.5	3.0	±0.6	±7	16	30	2
	P04N005265	4	1.6	1.6	5.2	±0.4	±6	16	30	2
	P08N005265	8	1.6	1.6	8.0	±0.5	±10	15	30	2
0.5-40	P02N005400	2	1.6	1.6	3.5	±0.5	±5	16	20	2
	P03N005400	3	1.6	1.6	4.3	±0.7	±9	16	20	2
	P04N005400	4	1.7	1.7	7.5	±0.5	±7	15	20	2
	P08N005400	8	1.8	1.8	11	±0.8	±12	15	20	2
1-18	P02N010180	2	1.4	1.4	1.2	±0.2	±3	18	30	5
	P03N010180	3	1.5	1.5	1.5	±0.5	±5	18	30	5
	P04N010180	4	1.5	1.5	2.5	±0.4	±5	17	30	5
	P08N010180	8	1.6	1.6	4.2	±0.6	±8	16	30	5
	P16N010180	16	1.6	1.6	7.4	±0.6	±8	16	30	5

*Above Theoretical I.L.
**Input signals meet the amplitude and phase unbalance

Freq. Range (GHz)	P/N	Way	Sum VSWR (:1) Max.	Distri. VSWR (:1) Max.	Insertion Loss* (dB) Max.	Amp. Unbal. (dB) Max.	Phase Unbal. (Deg.) Max.	Isolation (dB) Min.	FOR (W) Max.	REV** (W) Max.
1-40	P02N010400	2	1.5	1.5	2.4	±0.4	±5	18	20	2
	P04N010400	4	1.6	1.6	5.2	±0.4	±7	16	20	2
	P08N010400	8	1.7	1.7	7.3	±0.7	±11	15	20	2
1-67	P02N010670	2	1.7	1.7	3.9	±0.6	±8	16	12	1
	P04N010670	4	1.8	1.8	9.3	±0.9	±11	16	12	1
	P08N010670	8	1.9	1.9	14.7	±1.1	±14	15	12	1
2-18	P02N020180	2	1.4	1.4	1.0	±0.3	±3	18	30	5
	P03N020180	3	1.5	1.5	1.4	±0.5	±5	18	30	5
	P04N020180	4	1.5	1.5	1.9	±0.3	±5	18	30	5
	P05N020180	5	1.6	1.6	1.6	±0.7	±8	16	30	5
	P06N020180	6	1.5	1.5	2.4	±0.7	±6	18	30	5
	P08N020180	8	1.5	1.5	3.2	±0.4	±5	16	30	5
	P10N020180	10	1.6	1.6	2.8	±0.8	±9	16	30	5
	P12N020180	12	1.5	1.5	3.4	±0.8	±8	16	30	5
	P16N020180	16	1.6	1.6	4.4	±0.6	±7	16	30	5
2-40	P02N020400	2	1.6	1.6	1.8	±0.3	±4	18	20	2
	P04N020400	4	1.6	1.6	3.8	±0.5	±6	16	20	2
	P08N020400	8	1.6	1.7	5.9	±0.7	±10	15	20	2
2-67	P02N020670	2	1.8	1.8	3.3	±0.6	±8	16	12	1
6-18	P02N060180	2	1.4	1.4	0.7	±0.2	±3	18	30	5
	P03N060180	3	1.5	1.5	1.2	±0.5	±5	18	30	5
	P04N060180	4	1.5	1.5	1.2	±0.3	±4	18	30	5
	P05N060180	5	1.6	1.6	1.4	±0.6	±7	16	30	5
	P06N060180	6	1.5	1.6	1.4	±0.5	±6	18	30	5
	P08N060180	8	1.6	1.5	2.6	±0.4	±5	17	30	5
	P10N060180	10	1.7	1.7	2.5	±0.8	±8	16	30	5
	P12N060180	12	1.5	1.6	2.2	±0.6	±8	16	30	5
	P16N060180	16	1.6	1.5	3.5	±0.4	±6	17	30	5
6-40	P02N060400	2	1.6	1.6	1.5	±0.3	±5	17	20	2
	P03N060400	3	1.7	1.7	1.8	±0.8	±9	16	20	2
	P04N060400	4	1.6	1.6	2.9	±0.5	±6	16	20	2
	P05N060400	5	1.7	1.7	2.5	±1.0	±10	15	20	2
	P06N060400	6	1.7	1.7	2.8	±0.9	±11	15	20	2
	P08N060400	8	1.7	1.7	3.8	±0.8	±10	15	20	2
	P10N060400	10	1.8	1.8	4.9	±1.2	±14	15	20	2
	P12N060400	12	1.7	1.7	6.0	±1.0	±15	15	20	2
	P16N060400	16	1.7	1.7	5.5	±0.8	±12	15	20	2
6-67	P02N060670	2	1.8	1.8	2.6	±0.6	±8	16	12	1
18-40	P02N180400	2	1.6	1.6	1.2	±0.3	±4	18	20	2
	P03N180400	3	1.7	1.7	1.8	±0.7	±8	18	20	2
	P04N180400	4	1.6	1.6	2.2	±0.5	±5	18	20	2
	P05N180400	5	1.7	1.7	2.5	±1.0	±10	16	20	2
	P06N180400	6	1.7	1.7	2.8	±0.8	±10	17	20	2
	P08N180400	8	1.7	1.7	3.2	±0.6	±8	18	20	2
	P10N180400	10	1.8	1.8	4.9	±1.2	±14	16	20	2
	P12N180400	12	1.7	1.7	6.0	±1.0	±15	16	20	2
	P16N180400	16	1.8	1.7	4.7	±0.7	±12	16	20	2
18-50	P02N180500	2	1.6	1.6	1.6	±0.4	±5	18	20	1
	P04N180500	4	1.7	1.7	2.6	±0.6	±7	16	20	1
	P08N180500	8	1.8	1.8	3.8	±0.7	±10	16	20	1
18-67	P02N180670	2	1.8	1.8	2.3	±0.6	±8	18	12	1
	P03N180670	3	1.9	1.9	3.1	±1.0	±13	16	12	1
	P04N180670	4	1.8	1.8	3.6	±0.8	±10	16	12	1
	P08N180670	8	1.9	1.9	4.9	±0.9	±12	16	12	1

*Above Theoretical I.L.
**Input signals meet the amplitude and phase unbalance

Freq. Range (GHz)	P/N	Way	Sum VSWR (:1) Max.	Distri. VSWR (:1) Max.	Insertion Loss* (dB) Max.	Amp. Unbal. (dB) Max.	Phase Unbal. (Deg.) Max.	Isolation (dB) Min.	FOR (W) Max.	REV** (W) Max.
24-44 **(5G)**	P02N240440	2	1.6	1.6	1.5	±0.4	±4	20	20	1
	P03N240440	3	1.7	1.7	2.0	±0.8	±9	20	20	1
	P04N240440	4	1.7	1.7	2.4	±0.5	±6	20	20	1
	P05N240440	5	1.8	1.8	2.8	±1.0	±10	16	20	1
	P06N240440	6	1.7	1.7	3.4	±0.8	±10	18	20	1
	P08N240440	8	1.7	1.7	3.6	±0.6	±8	18	20	1
	P16N240440	16	1.8	1.8	5.4	±0.8	±10	16	20	1
26.5-40	P02N265400	2	1.6	1.6	1.2	±0.3	±3	18	20	2
	P03N265400	3	1.7	1.7	1.8	±0.6	±7	18	20	2
	P04N265400	4	1.6	1.6	2.2	±0.4	±5	20	20	2
	P05N265400	5	1.8	1.7	2.5	±0.8	±10	16	20	2
	P08N265400	8	1.6	1.6	3.0	±0.5	±8	18	20	2
26.5-50	P02N265500	2	1.6	1.6	1.4	±0.4	±4	18	20	1
	P03N265500	3	1.8	1.8	2.4	±0.8	±10	18	20	1
	P04N265500	4	1.7	1.7	2.6	±0.5	±7	18	20	1
	P08N265500	8	1.8	1.8	3.8	±0.7	±10	16	20	1

*Above Theoretical I.L.
**Input signals meet the amplitude and phase unbalance

Ultra Wideband Directional/Dual-directional Coupler

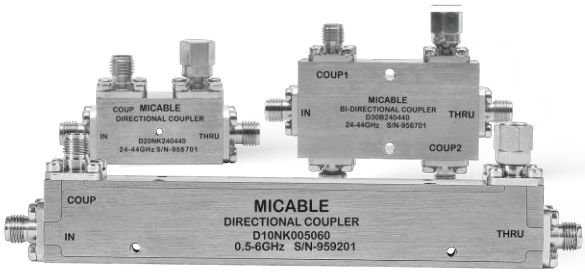

- Frequency range 0.3-67GHz
- Low VSWR / low insertion loss
- Excellent coupling, flatness and directivity which will significantly improve the signal acquisition accuracy
- Environment conditions meet MIL-STD-202F
- Different types of connectors, custom designs & narrow bands are available

Test curve of D10N240440

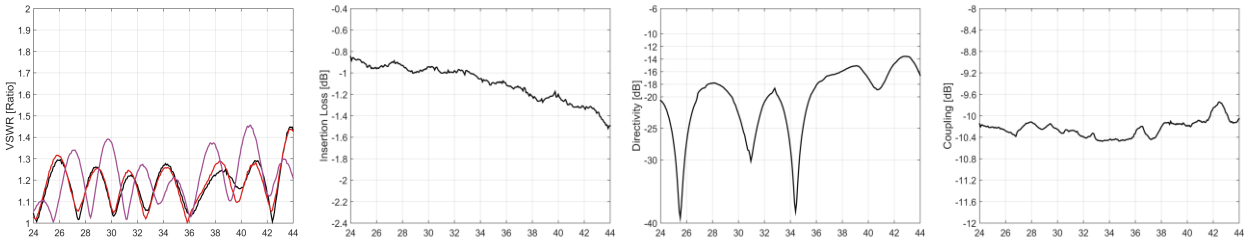

Specifications

	Freq. Range (GHz)	P/N	Coupling (dB) Max.	Main Line VSWR (:1) Max.	Coupling VSWR (:1) Max.	Insertion Loss* (dB) Max.	Flatness (dB) Max.	Directivity (dB) Min.	Power (W) Max.
Directional Coupler	0.3-67	D20N003670	20±2.0	1.9	1.9	6.1	±1.8	7	12
	0.45-6	D10N00450600	10±0.6	1.3	1.3	1.2	±0.8	18	30
		D20N00450600	20±0.6	1.3	1.3	0.7	±0.8	18	30
		D30N00450600	30±0.6	1.3	1.3	0.7	±0.8	18	30
	0.45-8	D10N00450800	10±0.6	1.3	1.3	1.3	±0.8	18	30
		D20N00450800	20±0.6	1.3	1.3	0.8	±0.8	18	30
		D30N00450800	30±0.6	1.3	1.3	0.8	±0.8	18	30
	0.5-6	D10N005060	10±0.5	1.3	1.3	1.2	±0.7	18	30
		D13N005060	13±0.5	1.2	1.2	0.9	±0.7	18	30
		D16N005060	16±0.5	1.2	1.2	0.7	±0.7	18	30
		D20N005060	20±0.6	1.2	1.2	0.6	±0.7	18	30
		D30N005060	30±0.7	1.2	1.2	0.6	±0.7	18	30
	0.5-18	D06N005180	6±0.8	1.5	1.5	2.6	±1.0	14	30
		D10N005180	10±0.7	1.4	1.4	1.8	±0.8	15	30
		D16N005180	16±0.6	1.4	1.4	1.5	±0.8	15	30
		D20N005180	20±0.6	1.4	1.4	1.0	±0.7	15	30
		D30N005180	30±0.8	1.4	1.4	1.0	±1.0	14	30
	0.5-26.5	D10N005265	10±0.7	1.5	1.5	2.2	±1.0	14	30
		D13N005265	13±0.7	1.5	1.5	2.2	±1.0	14	30
		D16N005265	16±0.6	1.5	1.5	1.7	±1.0	14	30
		D20N005265	20±0.7	1.5	1.5	1.4	±1.0	14	30
		D30N005265	30±1.0	1.5	1.6	1.3	±1.3	13	30

*Theoretical I.L. Included

	Freq. Range (GHz)	P/N	Coupling (dB) Max.	Main Line VSWR (:1) Max.	Coupling VSWR (:1) Max.	Insertion Loss* (dB) Max.	Flatness (dB) Max.	Directivity (dB) Min.	Power (W) Max.
Directional Coupler	1-18	D06N010180	6±0.6	1.5	1.5	2.5	±0.7	15	30
		D10N010180	10±0.5	1.4	1.5	1.4	±0.5	15	30
		D13N010180	13±0.5	1.4	1.4	1.6	±0.6	14	30
		D16N010180	16±0.5	1.4	1.4	1.1	±0.6	15	30
		D20N010180	20±0.5	1.4	1.4	1.0	±0.5	15	30
		D30N010180	30±0.7	1.4	1.4	0.8	±0.7	14	30
	2-18	D06N020180	6±1.0	1.6	1.6	2.3	±0.6	16	30
		D10N020180	10±0.5	1.4	1.4	1.3	±0.5	15	30
		D13N020180	13±0.5	1.4	1.4	1.3	±0.5	14	30
		D16N020180	16±0.5	1.4	1.4	0.8	±0.5	16	30
		D20N020180	20±0.5	1.4	1.4	0.7	±0.5	16	30
		D30N020180	30±0.5	1.4	1.4	0.7	±0.6	15	30
	18-40	D10N180400	10±0.7	1.6	1.6	1.5	±0.7	12	20
		D13N180400	13±1.0	1.7	1.7	1.2	±1.0	10	20
		D16N180400	16±0.6	1.6	1.7	1.2	±0.7	11	20
		D20N180400	20±0.6	1.6	1.6	1.2	±0.7	10	20
		D30N180400	30±0.6	1.7	1.7	1.0	±0.7	10	20
	18-50	D10N180500	10±0.7	1.8	1.8	1.8	±0.7	9	20
		D20N180500	20±0.8	1.8	1.8	1.5	±0.7	8	20
	24-44 (5G)	D10N240440	10±0.6	1.7	1.7	1.7	±0.6	10	20
		D13N240440	13±0.7	1.7	1.7	1.5	±0.7	10	20
		D16N240440	16±0.7	1.7	1.7	1.4	±0.7	10	20
		D20N240440	20±0.7	1.7	1.7	1.4	±0.6	10	20
		D30N240440	30±0.7	1.7	1.7	1.3	±0.6	10	20
	18-67	D10N180670	10±1.0	1.9	1.9	2.5	±1.0	7	12
		D20N180670	20±1.0	1.9	1.9	2.0	±1.1	7	12
		D30N180670	30±1.1	1.9	1.9	2.0	±1.2	7	12
Dual-directional Coupler	0.45-6	D10B00450600	10±0.9	1.3	1.3	2.2	±1.0	18	30
		D20B00450600	20±0.8	1.3	1.3	0.8	±0.9	18	30
		D30B00450600	30±0.8	1.3	1.3	0.8	±0.9	18	30
	0.45-8	D10B00450800	10±0.9	1.3	1.3	2.4	±1.0	18	30
		D20B00450800	20±0.8	1.3	1.3	0.9	±0.9	18	30
		D30B00450800	30±0.8	1.3	1.3	0.9	±0.9	18	30
	0.5-18	D10B005180	10±0.7	1.5	1.5	3.3	±1.0	15	30
		D20B005180	20±0.8	1.5	1.5	1.8	±0.9	14	30
		D30B005180	30±0.8	1.5	1.5	1.7	±0.9	14	30
	0.5-40	D10B005400	10±0.9	1.7	1.7	5.0	±1.4	12	20
		D20B005400	20±1.0	1.7	1.7	2.7	±1.2	10	20
		D30B005400	30±1.0	1.7	1.7	2.6	±1.2	10	20
	1-18	D10B010180	10±0.7	1.5	1.5	2.7	±0.9	14	30
		D20B010180	20±0.7	1.5	1.5	1.0	±0.7	14	30
		D30B010180	30±0.7	1.5	1.5	0.9	±0.7	14	30
	2-18	D10B020180	10±0.7	1.5	1.5	2.4	±0.7	14	30
		D20B020180	20±0.7	1.5	1.5	0.9	±0.7	14	30
		D30B020180	30±0.7	1.5	1.5	0.8	±0.7	14	30
	6-18	D10B060180	10±0.7	1.5	1.5	2.0	±0.7	14	30
		D20B060180	20±0.7	1.5	1.5	0.8	±0.7	14	30
		D30B060180	30±0.7	1.5	1.5	0.7	±0.7	14	30

*Theoretical I.L. Included

Dual-directional Coupler

Freq. Range (GHz)	P/N	Coupling (dB) Max.	Main Line VSWR (:1) Max.	Coupling VSWR (:1) Max.	Insertion Loss* (dB) Max.	Flatness (dB) Max.	Directivity (dB) Min.	Power (W) Max.
18-40	D10B180400	10±0.7	1.7	1.7	2.7	±0.7	10	20
	D20B180400	20±0.7	1.7	1.7	1.3	±0.7	10	20
	D30B180400	30±0.7	1.7	1.7	1.3	±0.7	10	20
26.5-40	D10B265400	10±0.5	1.7	1.7	2.7	±0.5	10	20
	D20B265400	20±0.7	1.7	1.7	1.3	±0.7	10	20
	D30B265400	30±0.7	1.7	1.7	1.2	±0.7	10	20
24-44 **(5G)**	D10B240440	10±0.7	1.7	1.7	2.8	±0.8	10	20
	D20B240440	20±0.7	1.7	1.7	1.4	±0.8	10	20
	D30B240440	30±0.7	1.7	1.7	1.3	±0.8	10	20

*Theoretical I.L. Included

★For all directional couplers, dual directional couplers with the same frequency band can be provided.

High Power Directional/Dual-directional Coupler

- Frequency range 0.3-18GHz
- High power 600W CW
- Low VSWR / low insertion loss
- Excellent coupling, flatness and directivity which will significantly improve the signal acquisition accuracy
- Environment conditions meet MIL-STD-202F

Test curve of D30H005060

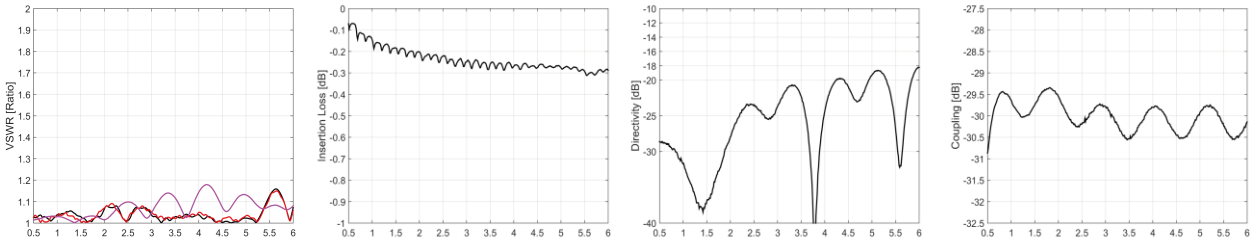

Specifications

	Freq. Range (GHz)	P/N	Coupling (dB) Max.	Main Line VSWR (:1) Max.	Coupling VSWR (:1) Max.	Insertion Loss* (dB) Max.	Flatness (dB) Max.	Directivity (dB) Min.	Power (W) Max.
High Power Directional Coupler	0.45-6	D3002H004060	30±1.0	1.3	1.3	0.7	±0.8	18	120
		D4002H004060	40±1.0	1.3	1.3	0.7	±0.8	18	120
		D3005H004060	30±0.8	1.3	1.3	0.5	±1.2	15	250
		D4005H004060	40±0.9	1.3	1.3	0.5	±1.3	15	250
		D3008H004060	30±0.8	1.3	1.3	0.5	±1.2	15	400
		D4008H004060	40±0.9	1.3	1.3	0.5	±1.3	15	400
		D3012H004060	30±0.8	1.3	1.3	0.5	±1.2	15	600
		D4012H004060	40±0.9	1.3	1.3	0.5	±1.3	15	600
	0.45-8	D3002H004080	30±1.0	1.3	1.3	0.8	±0.8	18	120
		D4002H004080	40±1.0	1.3	1.3	0.8	±0.8	18	120
		D3005H004080	30±0.9	1.4	1.4	0.6	±1.3	14	250
		D4005H004080	40±1.0	1.4	1.4	0.6	±1.4	14	250
		D3008H004080	30±0.9	1.4	1.4	0.6	±1.3	14	400
		D4008H004080	40±1.0	1.4	1.4	0.6	±1.4	14	400
		D3012H004080	30±0.9	1.4	1.4	0.6	±1.3	14	600
		D4012H004080	40±1	1.4	1.4	0.6	±1.4	14	600
	0.5-6	D3002H005060	30±1.0	1.3	1.3	0.6	±0.7	18	120
		D4002H005060	40±1.0	1.3	1.3	0.6	±0.7	18	120
		D3005H005060	30±0.7	1.3	1.3	0.4	±1.0	15	250
		D4005H005060	40±0.8	1.3	1.3	0.4	±1.1	15	250
		D3008H005060	30±0.7	1.3	1.3	0.4	±1.0	15	400
		D4008H005060	40±0.8	1.3	1.3	0.4	±1.1	15	400
		D3012H005060	30±0.7	1.3	1.3	0.4	±1.0	15	600
		D4012H005060	40±0.8	1.3	1.3	0.4	±1.1	15	600

*Theoretical I.L. Included

High Power Directional Coupler

Freq. Range (GHz)	P/N	Coupling (dB) Max.	Main Line VSWR (:1) Max.	Coupling VSWR (:1) Max.	Insertion Loss* (dB) Max.	Flatness (dB) Max.	Directivity (dB) Min.	Power (W) Max.
0.5-18	D3002H005180	30±1.2	1.5	1.6	1.0	±1.2	10	120
	D4002H005180	40±1.2	1.5	1.6	1.0	±1.4	10	120
	D3005H005180	30±1.2	1.5	1.6	1.0	±1.2	10	250
	D4005H005180	40±1.2	1.5	1.6	1.0	±1.4	10	250
	D3008H005180	30±1.2	1.5	1.6	1.0	±1.2	10	400
	D4008H005180	40±1.2	1.5	1.6	1.0	±1.4	10	400
0.7-6	D3002H007060	30±0.9	1.3	1.3	0.6	±0.7	18	120
	D4002H007060	40±0.9	1.3	1.3	0.5	±0.7	18	120
	D3005H007060	30±0.7	1.3	1.3	0.4	±0.9	15	250
	D4005H007060	40±0.7	1.3	1.3	0.4	±0.9	15	250
	D3008H007060	30±0.7	1.3	1.3	0.4	±0.9	15	400
	D4008H007060	40±0.7	1.3	1.3	0.4	±0.9	15	400
	D3012H007060	30±0.7	1.3	1.3	0.4	±0.9	15	600
	D4012H007060	40±0.7	1.3	1.3	0.4	±0.9	15	600
1-6	D3002H010060	30±0.8	1.3	1.3	0.4	±0.5	18	120
	D4002H010060	40±0.8	1.3	1.3	0.4	±0.5	18	120
	D3005H010060	30±0.7	1.3	1.3	0.4	±0.9	15	250
	D4005H010060	40±0.7	1.3	1.3	0.4	±0.9	15	250
	D3008H010060	30±0.7	1.3	1.3	0.4	±0.9	15	400
	D4008H010060	40±0.7	1.3	1.3	0.4	±0.9	15	400
	D3012H010060	30±0.7	1.3	1.3	0.4	±0.9	15	600
	D4012H010060	40±0.7	1.3	1.3	0.4	±0.9	15	600
1-18	D3002H010180	30±1.2	1.5	1.6	0.6	±1.0	10	120
	D4002H010180	40±1.2	1.5	1.6	0.6	±1.0	10	120
	D3005H010180	30±1.2	1.5	1.6	0.6	±1.0	10	250
	D4005H010180	40±1.2	1.5	1.6	0.6	±1.0	10	250
	D3008H010180	30±1.2	1.5	1.6	0.6	±1.0	10	400
	D4008H010180	40±1.2	1.5	1.6	0.6	±1.0	10	400
2-6	D3002H020060	30±0.8	1.3	1.3	0.4	±0.5	18	120
	D4002H020060	40±0.8	1.3	1.3	0.4	±0.5	18	120
	D3005H020060	30±0.7	1.3	1.3	0.4	±0.7	15	250
	D4005H020060	40±0.7	1.3	1.3	0.4	±0.7	15	250
	D3008H020060	30±0.7	1.3	1.3	0.4	±0.7	15	400
	D4008H020060	40±0.7	1.3	1.3	0.4	±0.7	15	400
	D3012H020060	30±0.7	1.3	1.3	0.4	±0.7	15	600
	D4012H020060	40±0.7	1.3	1.3	0.4	±0.7	15	600
2-8	D3002H020080	30±0.8	1.3	1.3	0.5	±0.5	18	120
	D4002H020080	40±0.8	1.3	1.3	0.5	±0.5	18	120
	D3005H020080	30±0.8	1.4	1.4	0.4	±0.7	14	250
	D4005H020080	40±0.8	1.4	1.4	0.4	±0.7	14	250
	D3008H020080	30±0.8	1.4	1.4	0.4	±0.7	14	400
	D4008H020080	40±0.8	1.4	1.4	0.4	±0.7	14	400
	D3012H020080	30±0.8	1.4	1.4	0.4	±0.7	14	600
	D4012H020080	40±0.8	1.4	1.4	0.4	±0.7	14	600
2-18	D3002H020180	30±1.0	1.5	1.6	0.6	±0.8	10	120
	D4002H020180	40±1.0	1.5	1.6	0.6	±0.8	10	120
	D3005H020180	30±1.0	1.5	1.6	0.6	±0.8	10	250
	D4005H020180	40±1.0	1.5	1.6	0.6	±0.8	10	250
	D3008H020180	30±1.0	1.5	1.6	0.6	±0.8	10	400
	D4008H020180	40±1.0	1.5	1.6	0.6	±0.8	10	400
6-18	D3002H060180	30±1.0	1.5	1.6	0.5	±0.7	10	120
	D4002H060180	40±1.0	1.5	1.6	0.5	±0.7	10	120
	D3005H060180	30±1.0	1.5	1.6	0.5	±0.7	10	250
	D4005H060180	40±1.0	1.5	1.6	0.5	±0.7	10	250
	D3008H060180	30±1.0	1.5	1.6	0.5	±0.7	10	400
	D4008H060180	40±1.0	1.5	1.6	0.5	±0.7	10	400

*Theoretical I.L. Included

High Power Dual-directional Coupler

Freq. Range (GHz)	P/N	Coupling (dB) Max.	Main Line VSWR (:1) Max.	Coupling VSWR (:1) Max.	Insertion Loss* (dB) Max.	Flatness (dB) Max.	Directivity (dB) Min.	Power (W) Max.
0.5-6	D3002HB005060	30±1.0	1.3	1.3	0.6	±1.0	18	120
	D4002HB005060	40±1.0	1.3	1.3	0.6	±1.0	18	120
	D3005HB005060	30±0.7	1.3	1.3	0.6	±1.2	15	250
	D4005HB005060	40±0.8	1.3	1.3	0.6	±1.3	15	250
	D3008HB005060	30±0.7	1.3	1.3	0.6	±1.2	15	400
	D4008HB005060	40±0.8	1.3	1.3	0.6	±1.3	15	400
	D3012HB005060	30±0.7	1.3	1.3	0.6	±1.2	15	600
	D4012HB005060	40±0.8	1.3	1.3	0.6	±1.3	15	600
0.5-8	D3002HB005080	30±1.0	1.3	1.3	0.7	±1.0	18	120
	D4002HB005080	40±1.0	1.3	1.3	0.7	±1.0	18	120
	D3005HB005080	30±0.8	1.4	1.4	0.7	±1.3	14	250
	D4005HB005080	40±0.9	1.4	1.4	0.7	±1.4	14	250
	D3008HB005080	30±0.8	1.4	1.4	0.7	±1.3	14	400
	D4008HB005080	40±0.9	1.4	1.4	0.7	±1.4	14	400
	D3012HB005080	30±0.8	1.4	1.4	0.7	±1.3	14	600
	D4012HB005080	40±0.9	1.4	1.4	0.7	±1.4	14	600
0.5-18	D3002HB005180	30±1.2	1.5	1.6	1.0	±1.5	10	120
	D4002HB005180	40±1.2	1.5	1.6	1.0	±1.7	10	120
	D3005HB005180	30±1.2	1.5	1.6	1.0	±1.5	10	250
	D4005HB005180	40±1.2	1.5	1.6	1.0	±1.7	10	250
	D3008HB005180	30±1.2	1.5	1.6	1.0	±1.5	10	400
	D4008HB005180	40±1.2	1.5	1.6	1.0	±1.7	10	400
7-6	D3002HB007060	30±1.0	1.3	1.3	0.6	±1.0	18	120
	D4002HB007060	40±1.0	1.3	1.3	0.6	±1.0	18	120
	D3005HB007060	30±0.7	1.3	1.3	0.5	±1.1	15	250
	D4005HB007060	40±0.7	1.3	1.3	0.5	±1.1	15	250
	D3008HB007060	30±0.7	1.3	1.3	0.5	±1.1	15	400
	D4008HB007060	40±0.7	1.3	1.3	0.5	±1.1	15	400
	D3012HB007060	30±0.7	1.3	1.3	0.5	±1.1	15	600
	D4012HB007060	40±0.7	1.3	1.3	0.5	±1.1	15	600
1-6	D3002HB010060	30±0.8	1.3	1.3	0.5	±0.7	18	120
	D4002HB010060	40±0.8	1.3	1.3	0.5	±0.7	18	120
	D3005HB010060	30±0.7	1.3	1.3	0.5	±1.1	15	250
	D4005HB010060	40±0.7	1.3	1.3	0.5	±1.1	15	250
	D3008HB010060	30±0.7	1.3	1.3	0.5	±1.1	15	400
	D4008HB010060	40±0.7	1.3	1.3	0.5	±1.1	15	400
	D3012HB010060	30±0.7	1.3	1.3	0.5	±1.1	15	600
	D4012HB010060	40±0.7	1.3	1.3	0.5	±1.1	15	600
1-18	D3002HB010180	30±1.2	1.5	1.6	0.8	±1.2	10	120
	D4002HB010180	40±1.2	1.5	1.6	0.8	±1.2	10	120
	D3005HB010180	30±1.2	1.5	1.6	0.8	±1.2	10	250
	D4005HB010180	40±1.2	1.5	1.6	0.8	±1.2	10	250
	D3008HB010180	30±1.2	1.5	1.6	0.8	±1.2	10	400
	D4008HB010180	40±1.2	1.5	1.6	0.8	±1.2	10	400
2-6	D3002HB020060	30±0.8	1.3	1.3	0.4	±0.7	18	120
	D4002HB020060	40±0.8	1.3	1.3	0.4	±0.7	18	120
	D3005HB020060	30±0.7	1.3	1.3	0.4	±0.9	15	250
	D4005HB020060	40±0.7	1.3	1.3	0.4	±0.9	15	250
	D3008HB020060	30±0.7	1.3	1.3	0.4	±0.9	15	400
	D4008HB020060	40±0.7	1.3	1.3	0.4	±0.9	15	400
	D3012HB020060	30±0.7	1.3	1.3	0.4	±0.9	15	600
	D4012HB020060	40±0.7	1.3	1.3	0.4	±0.9	15	600
2-8	D3002HB020080	30±0.8	1.3	1.3	0.5	±0.7	18	120
	D4002HB020080	40±0.8	1.3	1.3	0.5	±0.7	18	120
	D3005HB020080	30±0.8	1.4	1.4	0.4	±0.9	14	250
	D4005HB020080	40±0.8	1.4	1.4	0.4	±0.9	14	250

*Theoretical I.L. Included

High Power Dual-directional Coupler

Freq. Range (GHz)	P/N	Coupling (dB) Max.	Main Line VSWR (:1) Max.	Coupling VSWR (:1) Max.	Insertion Loss* (dB) Max.	Flatness (dB) Max.	Directivity (dB) Min.	Power (W) Max.
2-8	D3008HB020080	30±0.8	1.4	1.4	0.4	±0.9	14	400
	D4008HB020080	40±0.8	1.4	1.4	0.4	±0.9	14	400
	D3012HB020080	30±0.8	1.4	1.4	0.4	±0.9	14	600
	D4012HB020080	40±0.8	1.4	1.4	0.4	±0.9	14	600
2-18	D3002HB020180	30±1.0	1.5	1.6	0.6	±1.0	10	120
	D4002HB020180	40±1.0	1.5	1.6	0.6	±1.0	10	120
	D3005HB020180	30±1.0	1.5	1.6	0.6	±1.0	10	250
	D4005HB020180	40±1.0	1.5	1.6	0.6	±1.0	10	250
	D3008HB020180	30±1.0	1.5	1.6	0.6	±1.0	10	400
	D4008HB020180	40±1.0	1.5	1.6	0.6	±1.0	10	400
6-18	D3002HB060180	30±1.0	1.5	1.6	0.5	±0.9	10	120
	D4002HB060180	40±1.0	1.5	1.6	0.5	±0.9	10	120
	D3005HB060180	30±1.0	1.5	1.6	0.5	±0.9	10	250
	D4005HB060180	40±1.0	1.5	1.6	0.5	±0.9	10	250
	D3008HB060180	30±1.0	1.5	1.6	0.5	±0.9	10	400
	D4008HB060180	40±1.0	1.5	1.6	0.5	±0.9	10	400

*Theoretical I.L. Included

Ultra Wideband 90°/180° Hybird

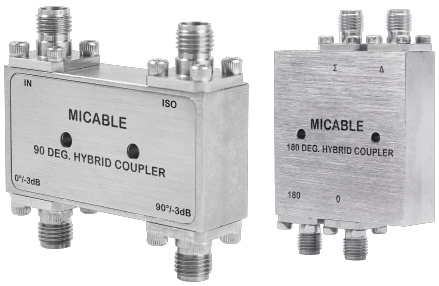

- Frequency range 0.3-67GHz
- Low VSWR / low insertion loss / high isolation, Excellent phase & amplitude unbalance
- High power handling
- Environment conditions meet MIL-STD-202F
- Different types of connectors, custom designs & narrow bands are available

Test curve of QN005060

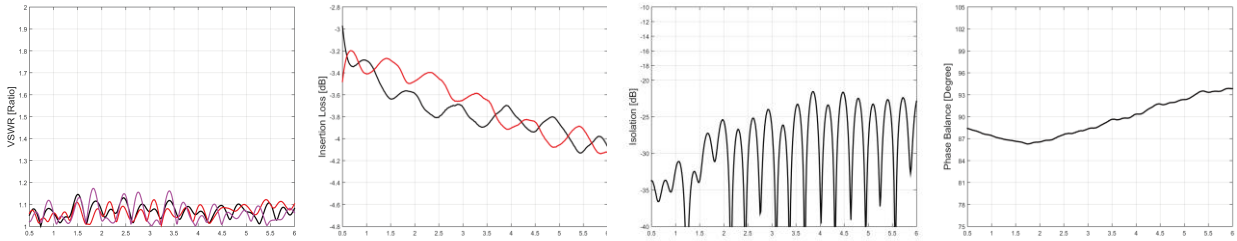

Specifications

Freq. Range (GHz)	P/N	Nominal Phase Unbal. Deg.	Ports VSWR (:1) Max.	Insertion Loss* (dB) Max.	Amplitude Unbal. (dB) Max.	Phase Unbal. (Deg.) Max.	Isolation (dB) Min.
0.5-6	QN005060	90	1.4	1.4	±0.5	±5	19
	HN005060	180	1.5	3.6	±1.0	±9	18
0.5-9	QN005090	90	1.4	1.8	±0.7	±5	19
1-18	QN010180	90	1.4	2.0	±0.8	±8	17
	HN010180	180	1.6	3.3	±1.0	±10	16
1-20	HN010200	180	1.6	3.6	±1.1	±11	15
1-26.5	QN020265	90	1.6	2.0	±1.1	±10	15
2-18	QN020180	90	1.5	1.6	±0.7	±8	17
	HN020180	180	1.6	2.0	±0.7	±9	16
18-40	QN180400	90	1.7	2.0	±0.6	±9	14
	HN180400	180	1.8	2.9	±1.2	±12	15
18-50	HN180500	180	1.9	3.8	±1.4	±14	12
24-44 (5G)	QN240440	90	1.8	2.3	±0.7	±10	14
	HN240440	180	1.8	3.4	±1.1	±11	14

*Above Theoretical 3dB

High Power Bi-directional Coupling Detector

MIcable 0.3-8GHz high power Bi-directional coupling detector detects the power forward and reverse signals with high accuracy in microwave systems up to 400W. It is widely applied in testing, wireless communication, radar, medical equipment and other fields.

Specifications (Other frequency bands can be customized)

P/N	SA-06-69	SA-06-06
Freq. Range	2-8GHz	6-18GHz
Insertion Loss	≤0.4dB	≤0.5dB
Main Line VSWR	≤1.4	≤1.4
Coupling	42±1dB	37±1dB
Directivity	≥12dB	≥10dB
Forward Detction Volage	1.2±0.2V (400W CW)	1.2±0.2V (100W CW)
Detection Voltage Flatness	≤15%	≤15%
Temp. Change Rate	≤±2.5% (-50~+55°C)	≤±2.5% (-50~+55°C)
CW Power	400W	200W
RF Connectors	N (F)	N (F)

Precision RF Microwave Coaxial Adapters

DC~67GHz

- Excellent VSWR
- Durability >1000 Cycles

Specifications

Model	Frequency Range	Connector 1	Connector 2	VSWR (Max.)
SMA Series				
SMA-BMA-FFF	DC-18GHz	SMA Female	BMA Female 2-Hole Flange	1.25:1
SMA-MM	DC-18GHz	SMA Male	SMA Male	1.15:1
SMA-MF	DC-18GHz	SMA Male	SMA Female	1.15:1
SMA-FF	DC-18GHz	SMA Female	SMA Female	1.15:1
SMA-FFF	DC-18GHz	SMA Female	SMA Female 4-Hole Flange	1.15:1
SMA-MMW	DC-18GHz	SMA Male	SMA Male Right Angle	1.25:1
SMA-MFW	DC-18GHz	SMA Male	SMA Female Right Angle	1.25:1
SMA-FFW	DC-18GHz	SMA Female	SMA Female Right Angle	1.25:1
SMA-TNC-MM	DC-18GHz	SMA Male	TNC Male	1.20:1
SMA-TNC-MF	DC-18GHz	SMA Male	TNC Female	1.20:1
SMA-TNC-FM	DC-18GHz	SMA Female	TNC Male	1.20:1
SMA-TNC-FF	DC-18GHz	SMA Female	TNC Female	1.20:1
SMA-MMH	DC-27GHz	SMA Male	SMA Male	1.15:1
SMA-MFH	DC-27GHz	SMA Male	SMA Female	1.15:1
SMA-FFH	DC-27GHz	SMA Female	SMA Female	1.15:1
SMA-FFFH	DC-27GHz	SMA Female	SMA Female 4-Hole Flange	1.15:1
SMA-MFQH	DC-27GHz	SMA Male Quick-plug	SMA Female	1.15:1
N Series				
N-SMA-FFYC	DC-6GHz	N Female	SMA Female Bulkhead	1.25:1
N-MM	DC-18GHz	N Male	N Male	1.15:1
N-MF	DC-18GHz	N Male	N Female	1.15:1
N-FF	DC-18GHz	N Female	N Female	1.15:1
N-FFY	DC-18GHz	N Female	N Female Bulkhead	1.15:1
N-MMW	DC-18GHz	N Male	N Male Right Angle	1.15:1
N-MFW	DC-18GHz	N Male	N Female Right Angle	1.15:1
N-FFW	DC-18GHz	N Female	N Female Right Angle	1.15:1
N-SMA-MM	DC-18GHz	N Male	SMA Male	1.15:1
N-SMA-MF	DC-18GHz	N Male	SMA Female	1.15:1
N-SMA-FF	DC-18GHz	N Female	SMA Female	1.15:1
N-SMA-FM	DC-18GHz	N Female	SMA Male	1.15:1
N-SMA-FFF	DC-18GHz	N Female	SMA Female 4-Hole Flange	1.15:1
N-SMA-FFY	DC-18GHz	N Female	SMA Female Bulkhead	1.15:1

Model	Frequency Range	Connector 1	Connector 2	VSWR (Max.)
N Series				
N-TNC-MM	DC-18GHz	N Male	TNC Male	1.20:1
N-TNC-MF	DC-18GHz	N Male	TNC Female	1.20:1
N-TNC-FM	DC-18GHz	N Female	TNC Male	1.20:1
N-TNC-FF	DC-18GHz	N Female	TNC Female	1.20:1
TNC Series				
TNC-MM	DC-18GHz	TNC Male	TNC Male	1.20:1
TNC-MF	DC-18GHz	TNC Male	TNC Female	1.20:1
TNC-FF	DC-18GHz	TNC Female	TNC Female	1.20:1
3.5mm Series				
35-FFF	DC-33GHz	3.5mm Female	3.5mm Female 4-Hole Flange	1.15:1
35-MF	DC-33GHz	3.5mm Male	3.5mm Female	1.15:1
35-MM	DC-33GHz	3.5mm Male	3.5mm Male	1.15:1
35-FF	DC-33GHz	3.5mm Female	3.5mm Female	1.15:1
35-MFE	DC-34GHz	3.5mm Male	3.5mm Female	1.25:1
35-MME	DC-34GHz	3.5mm Male	3.5mm Male	1.25:1
35-FFE	DC-34GHz	3.5mm Female	3.5mm Female	1.25:1
2.92mm Series				
292-SMA-FF	DC-27GHz	2.92mm Female	SMA Female	1.15:1
292-SMA-FM	DC-27GHz	2.92mm Female	SMA Male	1.15:1
292-SMA-MF	DC-27GHz	2.92mm Male	SMA Female	1.15:1
292-SMA-MM	DC-27GHz	2.92mm Male	SMA Male	1.15:1
292-35-FF	DC-33GHz	2.92mm Female	3.5mm Female	1.15:1
292-35-FM	DC-33GHz	2.92mm Female	3.5mm Male	1.15:1
292-35-MF	DC-33GHz	2.92mm Male	3.5mm Female	1.15:1
292-35-MM	DC-33GHz	2.92mm Male	3.5mm Male	1.15:1
292-MME	DC-40GHz	2.92mm Male	2.92mm Male	1.25:1
292-MM	DC-40GHz	2.92mm Male	2.92mm Male	1.15:1
292-MFE	DC-40GHz	2.92mm Male	2.92mm Female	1.25:1
292-MF	DC-40GHz	2.92mm Male	2.92mm Female	1.15:1
292-FFE	DC-40GHz	2.92mm Female	2.92mm Female	1.25:1
292-FF	DC-40GHz	2.92mm Female	2.92mm Female	1.15:1
292-FFFS	DC-40GHz	2.92mm Female	2.92mm Female 4-Hole Flange	1.20:1
292-FFF	DC-40GHz	2.92mm Female	2.92mm Female 4-Hole Flange	1.20:1
292-FFW	DC-40GHz	2.92mm Female	2.92mm Female Right Angle	1.25:1
292-MFW	DC-40GHz	2.92mm Male	2.92mm Female Right Angle	1.25:1
292-MMW	DC-40GHz	2.92mm Male	2.92mm Male Right Angle	1.25:1
292-FFY	DC-40GHz	2.92mm Female	2.92mm Female Bulkhead	1.20:1
NMD Series				
NMD24-292-MF	DC-40GHz	NMD2.4mm Male	2.92mm Female	1.15:1
NMD24-292-MM	DC-40GHz	NMD2.4mm Male	2.92mm Male	1.15:1
NMD24-NMD292-MF	DC-40GHz	NMD2.4mm Male	NMD2.92mm Female	1.15:1
NMD24-NMD292-MM	DC-40GHz	NMD2.4mm Male	NMD2.92mm Male	1.15:1
NMD292-292-FM	DC-40GHz	NMD2.92mm Female	2.92mm Male	1.15:1
NMD292-MF	DC-40GHz	NMD2.92mm Male	NMD2.92mm Female	1.15:1
2.4mm Series				
24-SMA-FF	DC-27GHz	2.4mm Female	SMA Female	1.15:1
24-SMA-FM	DC-27GHz	2.4mm Female	SMA Male	1.15:1
24-SMA-MF	DC-27GHz	2.4mm Male	SMA Female	1.15:1
24-SMA-MM	DC-27GHz	2.4mm Male	SMA Male	1.15:1

Model	Frequency Range	Connector 1	Connector 2	VSWR (Max.)
2.4mm Series				
24-35-MM	DC-33GHz	2.4mm Male	3.5mm Male	1.15:1
24-35-FF	DC-33GHz	2.4mm Female	3.5mm Female	1.15:1
24-35-FM	DC-33GHz	2.4mm Female	3.5mm Male	1.15:1
24-35-MF	DC-33GHz	2.4mm Male	3.5mm Female	1.15:1
24-292-FF	DC-40GHz	2.4mm Female	2.92mm Female	1.15:1
24-292-FM	DC-40GHz	2.4mm Female	2.92mm Male	1.15:1
24-292-MF	DC-40GHz	2.4mm Male	2.92mm Female	1.15:1
24-292-MM	DC-40GHz	2.4mm Male	2.92mm Male	1.15:1
24-292-FFF	DC-40GHz	2.4mm Female	2.92mm Female 4-Hole Flange	1.20:1
24-292-FFY	DC-40GHz	2.4mm Female	2.92mm Female Bulkhead	1.20:1
24-292-FFW	DC-40GHz	2.4mm Female	2.92mm Female Right Angle	1.25:1
24-292-FMW	DC-40GHz	2.4mm Female	2.92mm Male Right Angle	1.25:1
24-292-MFW	DC-40GHz	2.4mm Male	2.92mm Female Right Angle	1.25:1
24-292-MMW	DC-40GHz	2.4mm Male	2.92mm Male Right Angle	1.25:1
24-SMP-MMFD	DC-40GHz	2.4mm Male	SMP Male Full Detent	1.20:1
24-MF	DC-50GHz	2.4mm Male	2.4mm Female	1.15:1
24-MM	DC-50GHz	2.4mm Male	2.4mm Male	1.15:1
24-FF	DC-50GHz	2.4mm Female	2.4mm Female	1.15:1
24-FFF	DC-50GHz	2.4mm Female	2.4mm Female 4-Hole Flange	1.20:1
24-FFW	DC-50GHz	2.4mm Female	2.4mm Female Right Angle	1.25:1
24-MFW	DC-50GHz	2.4mm Male	2.4mm Female Right Angle	1.25:1
24-MMW	DC-50GHz	2.4mm Male	2.4mm Male Right Angle	1.25:1
24-FFY	DC-50GHz	2.4mm Female	2.4mm Female Bulkhead	1.20:1
1.85mm Series				
185-292-FF	DC-40GHz	1.85mm Female	2.92mm Female	1.15:1
185-292-FM	DC-40GHz	1.85mm Female	2.92mm Male	1.15:1
185-292-MF	DC-40GHz	1.85mm Male	2.92mm Female	1.15:1
185-292-MM	DC-40GHz	1.85mm Male	2.92mm Male	1.15:1
185-24-FF	DC-50GHz	1.85mm Female	2.4mm Female	1.20:1
185-24-FM	DC-50GHz	1.85mm Female	2.4mm Male	1.20:1
185-24-MF	DC-50GHz	1.85mm Male	2.4mm Female	1.20:1
185-24-MM	DC-50GHz	1.85mm Male	2.4mm Male	1.20:1
185-FF	DC-67GHz	1.85mm Female	1.85mm Female	1.25:1
185-MF	DC-67GHz	1.85mm Male	1.85mm Female	1.25:1
185-MM	DC-67GHz	1.85mm Male	1.85mm Male	1.25:1
185-FFF	DC-67GHz	1.85mm Female	1.85mm Female 4-Hole Flange	1.25:1
185-FFW	DC-67GHz	1.85mm Female	1.85mm Female Right Angle	1.25:1
185-MFW	DC-67GHz	1.85mm Male	1.85mm Female Right Angle	1.25:1
185-MMW	DC-67GHz	1.85mm Male	1.85mm Male Right Angle	1.25:1
185-FFY	DC-67GHz	1.85mm Female	1.85mm Female Bulkhead	1.25:1
185-MFY	DC-67GHz	1.85mm Male	1.85mm Female Bulkhead	1.25:1

Precision Fixed Attenuators

DC~40GHz

- Ultra-low leakage, superior shielding effectiveness
- Outstanding attenuation accuracy, excellent VSWR
- Passivated stainless steel, high eeliability
- A variety of attenuation values are available

Specifications

Model	Frequency Range (GHz)	Power (W) Max.	VSWR (:1) Max.	Attenuation (dB)	Connector Type
FA18-02XX*-SMSM	DC-18	2	1.35	1-10, 12, 15, 20, 30, 40	SMA
FA18-02XX*-SMSF	DC-18	2	1.35	1-10, 12, 15, 20, 30, 40	SMA
FA18-02XX*-SPMF	DC-18	2	1.35	1-10, 12, 15, 20, 30, 40	SSMP
FA40-02XX*-KMKF	DC-40	2	1.35	1-10, 15, 20, 30	2.92mm

*XX: Attenuation Value, '01' for 1dB attenuation, etc.

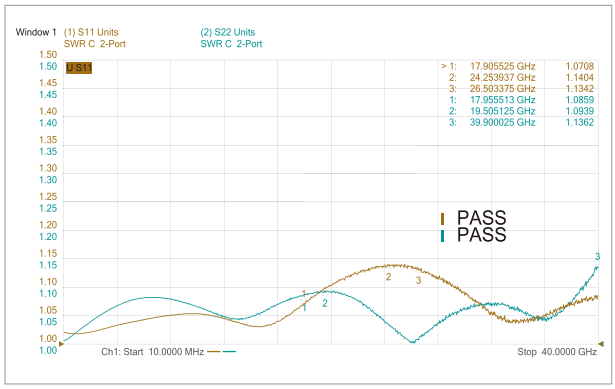

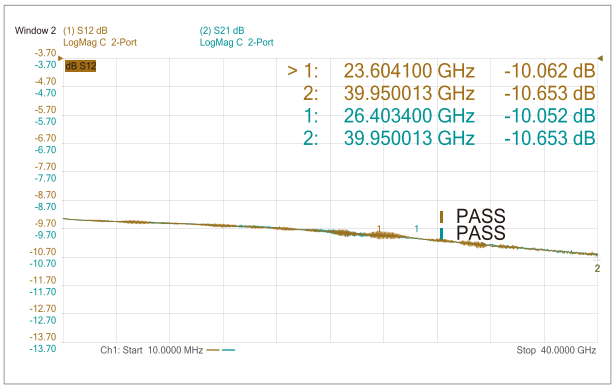

Test Curve of FA40-0210-KMKF

Precision Terminations

DC~70GHz

- **High precision, excellent VSWR**
- **Rugged construction**

Specifications

Model	Frequency Range (GHz)	Power (W) Max.	VSWR (:1) Max.	Connector Type
TM18-02-SF	DC-18	2	1.15	SMA-F
TM26-02-SM	DC-26.5	2	1.20	SMA-M
TM40-01-KM	DC-40	1	1.20	2.92mm-M
TM50-01-24M	DC-50	1	1.25	2.4mm-M
TM67-01-185M	DC-67	1	1.40	1.85mm-M
TM70-01-185M	DC-70	1	1.50	1.85mm-M

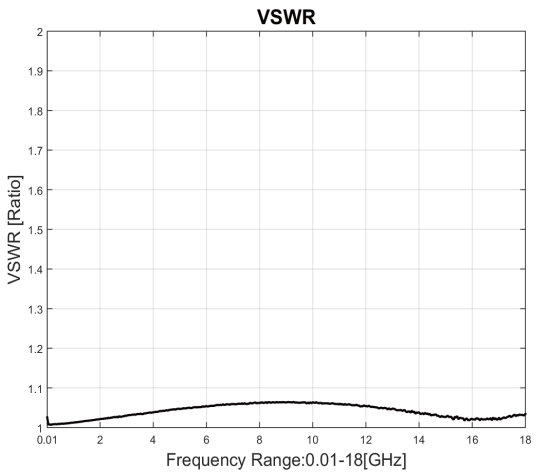

Test Curve of TM02-SF

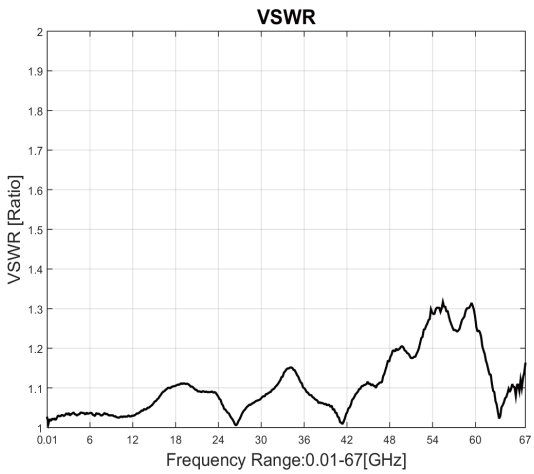

Test Curve of TM01-185M

02

Wideband/Ultra Wideband Switch

Solid State Switch

DC~43.5GHz

- **Non-reflective switch, frequency range DC~43.5GHz**
- **SPDT/SP4T/SP6T/SP8T/SP10T/SP16T and their various combinations**
- **Isolation up to 110dB, Insertion loss down to 1dB**
- **Low VSWR and input power up to 3W max.**
- **USB/I²C/SPI control ports, GUI control**

This series of solid-state switches adopts USB/I²C/SPI control interface, which has high reliability, high-speed switching performance, high isolation, low VSWR, and high withstand power. Some products also have low insertion loss. Users can use GUI software to control the switches through USB or self-programming. In addition, the SPI and I²C interfaces provide the option to control multiple switches at once through a simple serial port, supporting up to 8 switches connected in parallel with I²C or up to 30 switches connected in series with SPI.

Specifications

Model	Switch Type	Freq. Range (MHz)	Insertion Loss (dB) Typ.	Isolation (dB) Typ.	VSWR (:1) Typ.	Power (W) Max.	Control Interface
U2C-1SP2T-63VH	1xSPDT	10-6000	4.0	110	1.3	2.0	USB/I²C/SPI
U2C-1SP4T-63H	1xSP4T	2-6000	3.7	80	1.25	1.0	USB/I²C
USB-1SP2T-183	1X1SPDT	100-18000	2.5	65	1.2	0.25	USB
USB-1SP4T-183	1xSP4T	100-18000	3.6	65	1.2	0.25	USB
USB-1SP16T-83H	1xSP16T	1-8000	7.5	100	1.3	1.0	USB/TTL
USB-1SP8T-63H	1xSP8T	10-6000	4.0	80	1.25	1.0	USB
USB-2SP2T-DCH	2xSPDT	DC-8000	1.4	50	1.2	3.15	USB
USB-2SP4T-63H	2xSP4T	10-6000	2.5	85	1.3	1.0	USB
USB-4SP2T-63H	4xSPDT	10-6000	2.0	80	1.25	1.0	USB
USB-SP4T-63	1xSP4T	1-6000	1.0	50	1.2	0.5	USB
USB-1SP2T-A44	1xSPDT	100-43500	3.0	55	1.5	0.25	USB

Solid State Switch

SP8T 0.5~6GHz

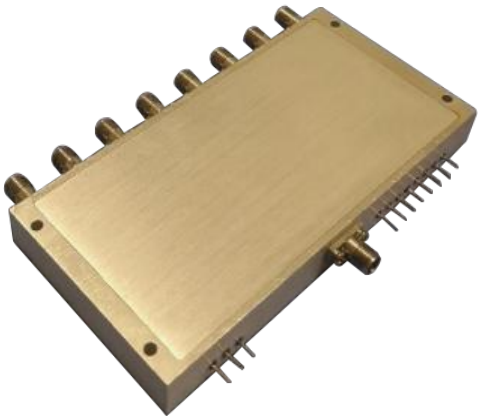

SP8T MSP8TM-005060

Outline Drawing:

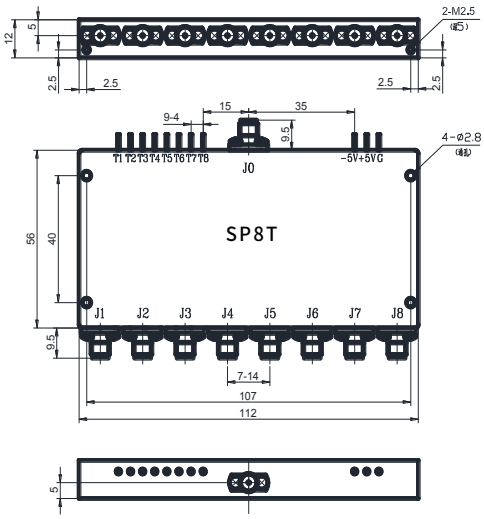

- Non-reflective switch
- Low insertion loss
- High isolation
- High speed switching
- High repetition
- High reliability

Specifications

Freq. Range (GHz)	0.5-6
Isolation (dB) Min.	70
Insertion Loss (dB) Max.	3.0
VSWR (Max.) (ports open)	1.6
Switching Time	250ns Max.
Input Power (no degradation)	200mW CW/Peak
Operation Voltage	+5V±2%, 200mA Max.; -5V±2%, 50mA Max.
Level	"0"(-0.3~+0.8V) on; "1"(+2.0~+5.0V) off

Solid State Switch

SPDT 18~40GHz

SPDT MSP2TR-1840

Outline Drawing:

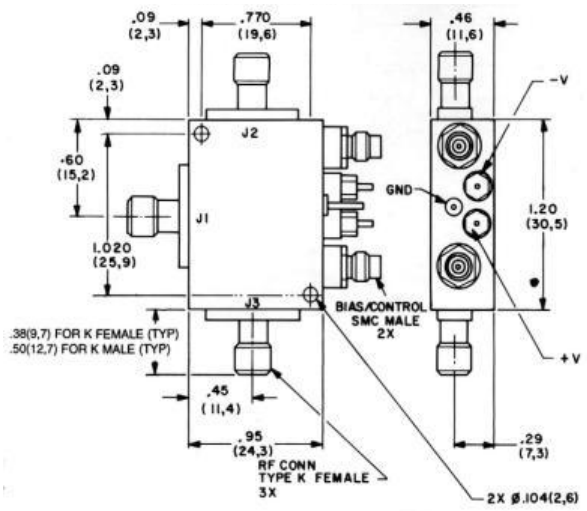

- **Reflective switch, amplitude & phase matching design**
- **Low spurious and better harmonic, low video leakage**
- **High repetition, good consistency**
- **High speed switching, low insertion loss**
- **High reliability, adapt to harsh environment**

Specifications

Freq. Range (GHz)	18-26.5	26.5-40
Isolation (dB) Min.	65	55
Insertion Loss (dB) Max.	3.5	4.5
VSWR (Max.) (ports open)	2.3	2.5
Rising/Fall Time	10ns Max.	
Switching Time	25ns Max.	
On/off Repetition	20MHz Max.	
Input power (no degradation)	1W CW/Peak	
Max. Power Handling(no damage)	Average Power: 1W, Peak Power: 75W (Max. Pulse Width: 1μs)	
Operation Voltage	+5V±2%, 75mA; -12~-15V, 50mA	
Level	"0"(-0.3~+0.8V) on; "1"(+2.0~+5.0V) off	

Solid State Switch

SP4T 26.5~40GHz

SP4T MSP4T-2640

Outline Drawing:

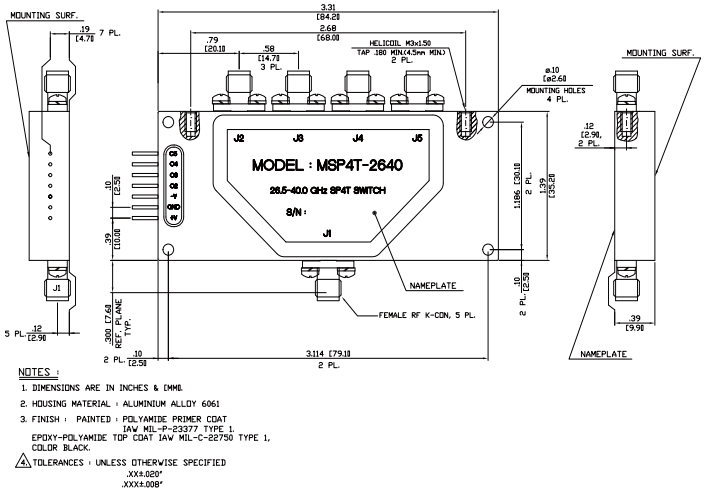

- **Non-reflective switch, amplitude & phase matching design**
- **Low spurious and better harmonic, low video leakage**
- **High repetition, good consistency**
- **High speed switching, low insertion loss**
- **High reliability, adapt to harsh environment**

Specifications

Freq. Range (GHz)	26.5-40
Isolation (dB) Min.	55
Insertion Loss (dB)	6.5 Typ. , 8.5Max.
VSWR(Max.) (on/off)	2.5
Phase Matching (at any two ports)	40° Typ.
Amplitude Matching (at any two ports)	1dB Typ.
Switching Time (on)	50ns Max.
Switching Time (off)	50ns Max.
Input Power (no degradation)	On Port: 1W CW/Peak
Input Power (no degradation)	Common Port: 1W CW/Peak
Input Power (no degradation)	Off Port: 100mW CW/Peak
Operation Voltage	+5V±5%, 375mA; -12±5%, 250mA
Level	"0"(-0.3~+0.8V) on; "1"(+2.0~+5.0V) off

Solid State Switch

SP6T 26~40GHz

SP6T MSP6T-260400-R

Outline Drawing:

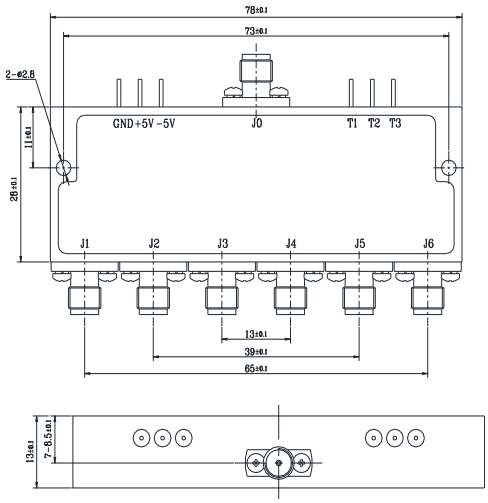

- **Non-reflective switch, amplitude & phase matching design**
- **High repetition, good consistency**
- **High speed switching, low insertion loss**
- **High reliability, adapt to harsh environment**

Specifications

Freq. Range (GHz)	26-40
Isolation (dB) Min.	60
Insertion Loss (dB) Max.	8.5
VSWR (Max.)	2.5
High Speed Switching	100ns Max.(50% TTL-90% RF or 10% RF)
Input Power	1W CW/ 10W Peak (Max. Pulse Width: 100μs, Max. Duty Cycle: 10%)
Control Logic	3Bit
Level	"0"(0~0.7V) on; "1"(2.4~5.0V) off
Operation Voltage	+5V±0.2V, 120mA (Max.) , -5V±0.2V, 60mA (Max.)

Solid State Switch

SP16T 26.5~40GHz

SP16T MSP16T-2640

Outline Drawing:

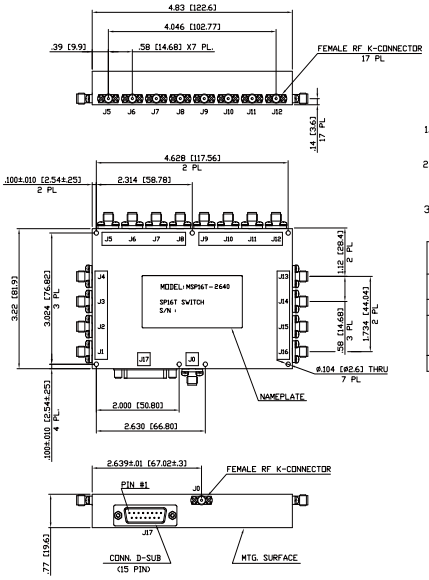

NOTES :

1. DIMENSIONS IN [ ] ARE IN MILLIMETERS . AND FOR REFERENCE ONLY .
2. FINISH : PAINTED: POLYAMIDE PRIMER COAT IAW MIL-P-23377 TYPE 1. EPOXY-POLYAMIDE TOP COAT IAW MIL-C-22750 TYPE 1, COLOR BLACK , PER INST. I-630204.
3. WEIGHT : 400 gr. Max.

4 BIT DECODER

A3	A2	A1	A0	RF PATH	STATE
0	0	0	0	J0-J1	I.L.
. . .					
1	1	1	1	J0-J16	I.L.

J17 PIN FUNCTIONS

PIN NUMBER	FUNCTION
1	+5V
2	N.C.
3	N.C.
4	N.C.
5	N.C.
6	N.C.
7	N.C.
8	-12V
9	A0 (LSB)
10	N.C.
11	A1
12	N.C.
13	A2
14	A3 (MSB)
15	GND

- **Non-reflective switch, amplitude & phase matching design**
- **Low spurious and better harmonic, low video leakage**
- **High repetition, good consistency**
- **High speed switching, low insertion loss**
- **Code control, ease to use**
- **High reliability, adapt to harsh environment**

Specifications

Freq. Range (GHz)	26.5-40
Isolation (dB) Min.	55
Insertion Loss (dB) Max.	14.0
VSWR (Max.) (on/off)	2.5
Phase Matching (at any two ports)	90° Typ.
Amplitude Matching (at any two ports)	3dB Typ.
Switching Time (on)	100ns Max.
Switching Time (off)	100ns Max.
Input Power (no degradation)	On Port: 1W CW/Peak
Input Power (no degradation)	Common Port: 1W CW/Peak
Input Power (no degradation)	Off Port: 100mW CW/Peak
Operation Voltage	+5V±5%, 1A Max.; -12±5%, 0.9A Max.
Control Logic	4bit

Mechanical Switch Series

DC~65GHz

Mechanical switch bases on the principle of electromagnetic induction, through the mechanical contact, it can realize the transformation of the signal path. The switch is with wide operating frequency band, low Insertion loss, high insolation, good VSWR and high power which make it can be used in laboratory and mass production testing.

Specifications

Model	Switch Type	Freq. Range (GHz)	Insertion Loss (dB)	Isolation (dB)	VSWR (:1)	Power (W) Max.
MSP2T-18-BM+	SPDT Reflective	DC-18	0.25 Typ.	80 Typ.	1.2 Typ.	20
MSP2T-18-12+	SPDT Reflective	DC-18	0.25 Typ.	80 Typ.	1.2 Typ.	10
MSP2T-18XL+	SPDT Reflective	DC-18	0.2 Typ.	80 Typ.	1.2 Typ.	10
MSP2TA-18-12D+	SPDT Absorptive	DC-18	0.25 Typ.	80 Typ.	1.2 Typ.	20
MSP2TA-18-12BM+	SPDT Absorptive	DC-18	0.25 Typ.	80 Typ.	1.2 Typ.	20
MSP2TA-18-12+	SPDT Absorptive	DC-18	0.25 Typ.	80 Typ.	1.2 Typ.	20
MSP2TA-18XL+	SPDT Absorptive	DC-18	0.25 Typ.	80 Typ.	1.2 Typ.	20
MSP4TA-18+	SP4T Absorptive	DC-18	0.25 Typ.	85 Typ.	1.2 Typ.	2
MSP4TA-18-12+	SP4T Absorptive	DC-18	0.25 Typ.	85 Typ.	1.2 Typ.	20
MSP4TA-18-12D+	SP4T Absorptive	DC-18	0.25 Typ.	85 Typ.	1.2 Typ.	20
MSP6TA-12+	SP6T Absorptive	DC-12	0.25 Typ.	90 Typ.	1.2 Typ.	20
MSP6TA-12-12+	SP6T Absorptive	DC-12	0.25 Typ.	90 Typ.	1.2 Typ.	20
MSP6T-12-12D+	SP6T Reflective	DC-12	0.25 Typ.	90 Typ.	1.2 Typ.	20
MSP8TA-12D+	SP8T Absorptive	DC-12	0.4 Typ.	90 Typ.	1.3 Typ.	20
MTS-18-12B+	Transfer	DC-18	0.25 Typ.	80 Typ.	1.15 Typ.	10
MTS-18XL-B+	Transfer	DC-18	0.25 Typ.	80 Typ.	1.15 Typ.	10
SR-2MIN Series	SPDT Reflective	DC-65	0.5dB@26GHz 1.1dB@65GHz Max.	50dB@65GHz Min.	1.9@65GHz Max.	30W@26GHz 18W@65GHz
STR-2 Series	SPDT Absorptive	DC-50	0.7dB@26GHz 1.1dB@50GHz Max.	50dB@50GHz Min.	2.0@50GHz Max.	2
SR-3/4/5/6C Series	SP3T-SP6T Reflective	DC-40	0.75dB@26GHz 0.9dB@40GHz Max.	45dB@40GHz Min.	2.0@40GHz Max.	30W@26GHz 25W@40GHz
STR-3/4/5/6 Series	SP3T-SP6T Absorptive	DC-40	0.75dB@26GHz 0.9dB@40GHz Max.	50dB@40GHz Min.	2.0@40GHz Max.	2

03

Wideband/Ultra Wideband Switch Matrix

Programmable Mechanical Switch Boxes

- **SPDT-SP8T and transfer switch, arbitrary**
- **Low insertion loss 0.25dB, high isolation 85-90dB**
- **End user friendly GUI and API function**
- **USB/Ethernet control interface**
- **Small size, ease to use**

The series of programmable mechanical switch boxes adopts Mini-Circuits' patented high reliability and ultra-long life mechanical switch, which has a switching life of up to 100 million times. it is suitable for the port expansion of vector network analyzer, optical module test and mobile phone terminal tester, realizing the automatic testing of multi-port devices, improving the test efficiency, and also suitable for signal routing and switching relay in the communication system.

Specifications

Model	Switch Type	Number	Freq. Range (GHz)	Insertion Loss (dB) Typ.	Isolation (dB) Typ.	VSWR (:1) Typ.	Power (W) Max.	Control Interface
RC-1SP6T-A12	SP6T	1	DC-12	0.2	90	1.2	20	USB & Ethernet
RC-2SP6T-A12	SP6T	2	DC-12	0.2	90	1.2	20	USB & Ethernet
RC-3SPDT-A18	SPDT	3	DC-18	0.25	85	1.2	20	USB & Ethernet
RC-8SPDT-A18	SPDT	8	DC-18	0.25	80	1.2	20	USB & Ethernet
RC-1SP4T-A18	SP4T	1	DC-18	0.25	80	1.2	20	USB & Ethernet
USB-2SPDT-A18	SPDT	2	DC-18	0.25	80	1.2	20	USB
RC-1SPDT-A18	SPDT	1	DC-18	0.25	80	1.2	20	USB & Ethernet
RC-2MTS-18	DPDT	2	DC-18	0.2	86	1.15	10	USB & Ethernet
RC-2SPDT-A18	SPDT	2	DC-18	0.25	80	1.2	20	USB & Ethernet
RC-4SPDT-A18	SPDT	4	DC-18	0.25	80	1.2	20	USB & Ethernet
RC-2SP4T-A18	SP4T	2	DC-18	0.25	80	1.2	20	USB & Ethernet
USB-4SPDT-A18	SPDT	4	DC-18	0.25	80	1.2	20	USB
USB-1SP4T-A18	SP4T	1	DC-18	0.25	80	1.2	20	USB
USB-1SPDT-A18	SPDT	1	DC-18	0.25	80	1.2	20	USB
USB-3SPDT-A18	SPDT	3	DC-18	0.25	85	1.2	20	USB
RC-4SPDT-A26	SPDT	4	DC-26.5	0.54	65	1.25	20	USB & Ethernet
RC-2SP4T-26	SP4T	2	DC-26.5	0.2	80	1.35	20	USB & Ethernet
RC-1SP6T-26	SP6T	1	DC-26.5	0.25	90	1.35	20	USB & Ethernet
RC-1SP4T-26	SP4T	1	DC-26.5	0.2	80	1.35	20	USB & Ethernet
RC-2SP6T-26	SP6T	2	DC-26.5	0.25	90	1.35	20	USB & Ethernet
RC-2SP4T-40	SP4T	2	DC-40	0.3	80	1.3	20	USB & Ethernet
RC-2SP6T-40	SP6T	2	DC-40	0.4	80	1.7	20	USB & Ethernet
RC-1SP4T-40	SP4T	1	DC-40	0.3	80	1.3	20	USB & Ethernet
RC-1SP6T-40	SP6T	1	DC-40	0.4	80	1.7	20	USB & Ethernet
RC-1SP6T-50	SP6T	1	DC-50	0.4	75	1.4	20	USB & Ethernet
RCM-2SP8T-26	SP8T	2	DC-26.5	0.3	70	1.35	5	USB & Ethernet

RCM Series, Customized for Multi-Functional Miniaturized Module Test Solution

6 Channel Programmable Attenuator, 0~110dB

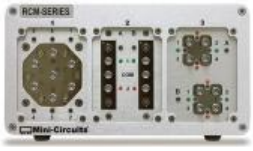

Switch Configuration, 1SP6T, 2SPDT, 2Transfer(DPDT)

4 Channel Programmable Attenuator
with screen and manual control button ,0~110dB

Switch Configuration, 2SP8T

RCM series modular test systems offer flexibility and fast turnaround for compact test setups. The design consists of a small, light-weight chassis with up to three open hardware windows, each of which may be outfitted with your choice of programmable attenuators or switches.

The system can be controlled via USB or Ethernet (supporting both HTTP and Telnet network protocols). Full software support is provided, including our user-friendly GUI application for Windows and a full API with programming instructions for Windows and Linux environments (both 32-bit and 64-bit systems).

Specifications

RCM-100 Series

Model	Channels	Performance per Channel		
		Frequency (MHz)	Attenuation (dB)	Step Size (dB)
RCM-30	4	1-6000	0-30	0.25
RCM-60	4	1-6000	0-60	0.25
RCM-100	4	1-6000	0-95	0.25
RCM-110	4	1-6000	0-110	0.25
RCM-120	4	1-4000	0-120	0.25
RCM-30-6	6	1-6000	0-30	0.25
RCM-60-6	6	1-6000	0-60	0.25
RCM-100-6	6	1-6000	0-95	0.25
RCM-110-6	6	1-6000	0-110	0.25
RCM-120-6	6	1-4000	0-120	0.25

RCM-200 Series

Model	Window1	Window2	Window3
RCM-1SP8T-12	SP8T 12GHz	--blank --	--blank --
RCM-2SP8T-12	SP8T 12GHz	SP8T 12GHz	--blank --
RCM-3SP6T-12	SP6T 12GHz	SP6T 12GHz	SP6T 12GHz
RCM-3SP4T-18	SP4T 18GHz	SP4T 18GHz	SP4T 18GHz
RCM-6SPDT-18	2x SPDT 18GHz	2x SPDT 18GHz	2x SPDT 18GHz
RCM-200	SP4T 18GHz	MTS 18GHz	--blank --
RCM-202	SP4T 18GHz	SPDT 18GHz	SP4T 18GHz
RCM-203	SP6T 12GHz	SP4T 18GHz	--blank --
RCM-204	SP4T 18GHz	SPDT 18GHz	--blank --
RCM-205	SPDT 18GHz	2x MTS 18GHz	SPDT 18GHz
RCM-207	SP4T 18GHz	2x SPDT 18GHz	SP4T 18GHz
RCM-208	SP4T 18GHz	SPDT 18GHz	2x SPDT 18GHz
RCM-210	SP6T 12GHz	SPDT 18GHz	2x SPDT 18GHz
RCM-211	SP4T 18GHz	2x MTS 18GHz	SP4T 18GHz
RCM-212	2x SPDT 18GHz	--blank --	--blank --
RCM-213	SPDT 18GHz	MTS 18GHz	2x SPDT 18GHz
RCM-401	SP6T 40GHz	SP6T 40GHz	SP6T 40GHz

ZT/ZTVX series, N x M Mechanical Switch Matrices

ZT/ZTVX series mechanical switch matrices are composed of Mini-Circuits high reliability, high performance, and ultra-long life mechanical switches, which can realize N × M blocking. They are widely used in the testing of multiport microwave components, such as multiport antenna, multiport filter, multichannel power divider combiner, and TR components, which can improve the efficiency of microwave instrumentation, R&D, production & testing, and reduce testing costs.

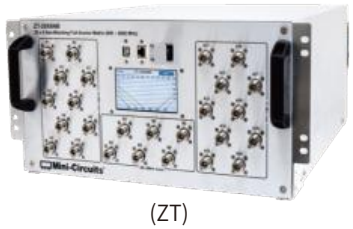

(ZT)

(ZTVX)

- **Proprietary mechanical switch structure design**
- **Switching time up to 10M to 100M**
- **High isolation/Low loss**
- **High repeatability and consistency**
- **Customize other switch matrix**
- **USB/Ethenet**
- **User-friendly GUI control software and API connectors**

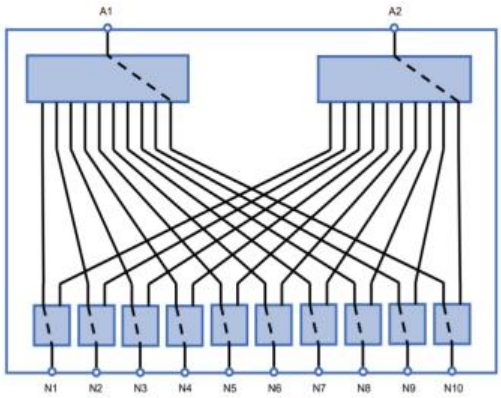

2×10 Blocking Switch Matrices

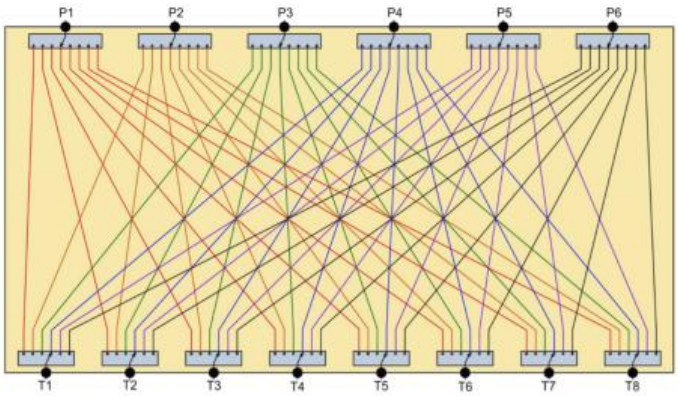

6×8 Blocking Switch Matrices

Specifications

Model	Freq. Range (MHz)	Product Description	Structure
ZT-6X3B	DC - 12000	6×3 switch matrix	19-inch standard case
ZT-24X48B	600 - 6000	24×48 switch matrix	19-inch standard case
ZT-24X8B	600 - 6000	24×8 switch matrix	19-inch standard case
ZT-175	DC - 12000	6×8 switch matrix	19-inch standard case
ZTVX-n-12 Series	DC - 12000	2×8, 2×10, 2×12, 2×16 switch matrix	19-inch standard case
ZTVX-n-18 Series	DC - 18000	2×8, 2×10, 2×12, 2×16 switch matrix	19-inch standard case

1x64 Solid State Switch Matrix

1×64 wideband solid state switch matrix is with one input and 64 outputs. With superior design and manufacturing technology, it has the features of low loss, high isolation, high speed switching and high reliability. The 64 output ports have good amplitude and phase consistency among the ports since the phase & amplitude matching structure. We can also provide corresponding control software (at extra charge), which can be connected with the switch matrix to adapt to most test instruments in the market at present so that customers can do production and other types of tests. It is suitable for test systems of 5G RRU, WiFi 6E, phased array, and antenna array.

- **Wideband freq. range, 0.5-6GHz（option to 8GHz）**
- **Low insertion loss, 6dB Max.**
- **High isolation, 70dB Min.**
- **Excellent amplititude & phase consistency**
- **High reliability & high repeatability**
- **USB/Ethernet control**

Specifications

Parameter	Min.	Typ.	Max.	Unit
Freq. Range	0.5	-	6	GHz
Number of channels	-	-	64	-
Insertion Loss	-	4.5	6	dB
VSWR	-	-	2.0	:1
Isolation	70	80	-	dB
Phase consistency	-	±5	±15	Deg
Amplitude consistency	-	±0.3	±0.6	dB
Input power	-	-	30	dBm
AC Supply	100	-	240	VAC
Control Ports	USB/Ethernet			
RF Connectors	SMA Female			

04

Wideband/Ultra Wideband Amplitude & Phase Controller Product

Ultra Wideband High Accuracy Programmable Attenuator

0.4~6GHz

MDA004060-50E ultra wideband high accuracy programmable attenuator is a compact and portable device, covering 0.4-6GHz with 0.1dB step, 0.2dB max. 0.1dB typ. high absolute attenator accuracy and 50dB attenuation dynamic range over whole band. It can be controlled through GUI user interface software via USB/Ethernet and can be applied in microwave test or integraed in microwave test system. Its stability and repetition can provde reliable test data in long term testing.

- Ultra wideband, 0.4-6GHz
- Ultra high accuracy, ultra high resolution
- No calibration required,
  high stability and high repeatability
- USB/Ethernet interface, simple to usein
- Small size, built-in power module
- Cuotom design, frequency 0.5-40GHz
- Custom high dynamic range, up to 120dB

Outline Drawing

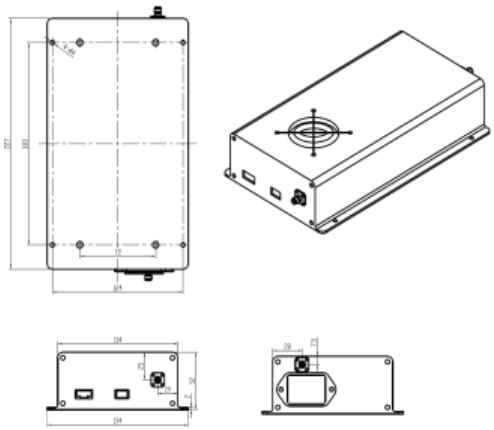

Electrical Specifications at 23±3°C

Parameter	Conditions	Min.	Typ.	Max.	Unit
Attenuation Range	1dB Step(0.1dB optional)	0	-	50	dB
Attenuation Accuracy	@0~50dB	-	±0.1	±0.2	dB
Insertion Loss	@0dB Att	-	-	4.5	dB
Input Power (Max.)	@0dB	-	-	+17	dBm
VSWR	@0~50dB	-	-	2	:1
AC Input Voltage	-	100	-	240	VAC
Control Ports	USB/Ethernet				
RF In/Out Connectors	SMA Female				
Size	227 × 114 × 50 mm (Without Base Plate)				
Operating Temp.	0°C - 50°C				
Storage Temp.	-20°C - 70°C				

Ultra Wideband High Accuracy Programmable Attenuator

0.4~8GHz

MDA004080-50E ultra wideband high accuracy programmable attenuator is a compact and portable device, covering 0.4-8GHz with 0.1dB step, 0.2dB max. 0.1dB typ. high absolute attenator accuracy and 50dB attenuation dynamic range over whole band. It can be controlled through GUI user interface software via USB/Ethernet and can be applied in microwave test or integraed in microwave test system. Its stability and repetition can provde reliable test data in long term testing.

- Ultra wideband, 0.4-8GHz
- Ultra high accuracy, ultra high resolution
- No calibration required,
  high stability and high repeatability
- USB/Ethernet interface, simple to usein
- Small size, built-in power module
- Cuotom design, frequency 0.5-40GHz
- Custom high dynamic range, up to 120dB

Outline Drawing

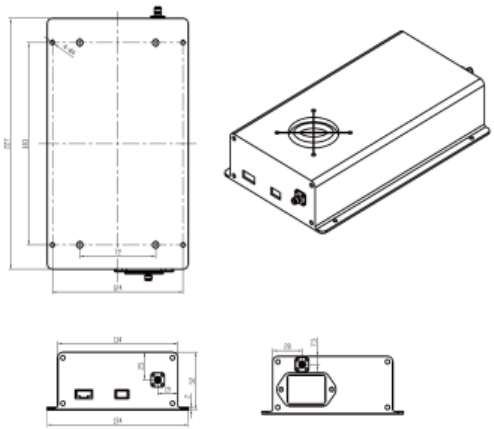

Electrical Specifications at 23±3°C

Parameter	Conditions	Min.	Typ.	Max.	Unit
Attenuation Range	1dB Step(0.1dB optional)	0	-	50	dB
Attenuation Accuracy	@0~50dB	-	±0.1	±0.2	dB
Insertion Loss	@0dB	-	-	4.5	dB
Input Power (Max.)	@0dB	-	-	+17	dBm
VSWR	@0~50dB	-	-	2	:1
AC Input Voltage	-	100	-	240	VAC
Control Ports	USB/Ethernet				
RF In/Out Connectors	SMA Female				
Size	227 × 114 × 50 mm (Without Base Plate)				
Operating Temp.	0°C - 50°C				
Storage Temp.	-20°C - 70°C				

Ultra Wideband High Accuracy Programmable Attenuator

0.5~2GHz

MDA005020-50E ultra wideband high accuracy programmable attenuator is a compact and portable device, covering 0.5-2GHz with 0.1dB step, 0.2dB max. 0.1dB typ. high absolute attenator accuracy and 50dB attenuation dynamic range over whole band. It can be controlled through GUI user interface software via USB/Ethernet and can be applied in microwave test or integraed in microwave test system. Its stability and repetition can provde reliable test data in long term testing.

- Ultra wideband, 0.5-2GHz
- Ultra high accuracy, ultra high resolution
- No calibration required,
  high stability and high repeatability
- USB/Ethernet interface, simple to usein
- Small size, built-in power module
- Cuotom design, frequency 0.5-40GHz
- Custom high dynamic range, up to 120dB

Outline Drawing

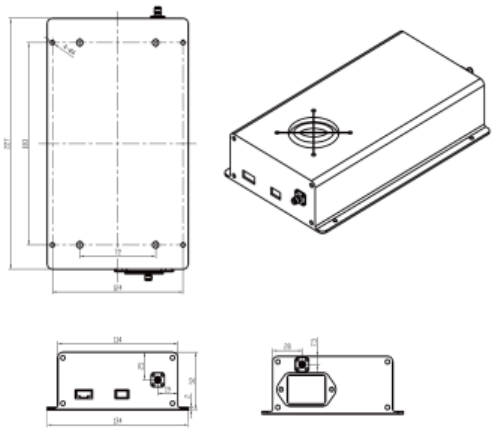

Electrical Specifications at 23±3°C

Parameter	Conditions	Min.	Typ.	Max.	Unit
Attenuation Range	0.1dB Step	0	-	50	dB
Attenuation Accuracy	@0~50dB	-	±0.1	±0.2	dB
Insertion Loss	@0dB	-	-	2.5	dB
Input Power (Max.)	@0dB	-	-	0	dBm
VSWR	@0~50dB	-	-	2	:1
AC Input Voltage	-	100	-	240	VAC
Control Ports	USB/Ethernet				
RF In/Out Connectors	SMA Female				
Size	227 × 114 × 50 mm (Without Base Plate)				
Operating Temp.	0°C - 50°C				
Storage Temp.	-20°C - 70°C				

Ultra Wideband High Accuracy Programmable Attenuator

1.7~6GHz

MDA017060-60E ultra wideband high accuracy programmable attenuator is a compact and portable device, covering 1.7-6GHz with 0.1dB step, 0.2dB max. 0.1dB typ. high absolute attenator accuracy and 60dB attenuation dynamic range over whole band. It can be controlled through GUI user interface software via USB/Ethernet and can be applied in microwave test or integraed in microwave test system. Its stability and repetition can provde reliable test data in long term testing.

- Ultra Wideband, 1.7-6GHz
- Ultra high accuracy, ultra high resolution
- No calibration required,
  high stability and high repeatability
- USB/Ethernet interface, simple to usein
- Small size, built-in power module
- Cuotom design, frequency 0.5-40GHz
- Custom high dynamic range, up to 120dB

Outline Drawing

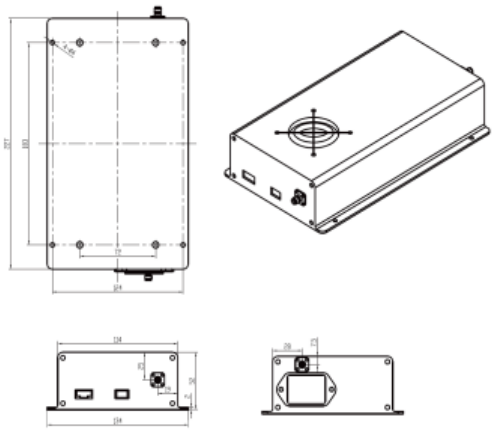

Electrical Specifications at 23±3°C

Parameter	Conditions	Min.	Typ.	Max.	Unit
Attenuation Range	0.1dB Step	0	-	60	dB
Attenuation Accuracy	@0~60dB	-	±0.1	±0.2	dB
Insertion Loss	@0dB	-	-	2.5	dB
Input Power (Max.)	@0dB	-	-	+20	dBm
VSWR	@0~60dB	-	-	2.2	:1
AC Input Voltage	-	100	-	240	VAC
Control Ports	USB/Ethernet				
RF In/Out Connectors	SMA Female				
Size	227 x 114 x 50 mm (Without Base Plate)				
Operating Temp.	0°C - 50°C				
Storage Temp.	-20°C - 70°C				

Ultra Wideband High Accuracy Programmable Attenuator

6~18GHz

MDA060180-50E ultra wideband high accuracy programmable attenuator is a compact and portable device, covering 6-18GHz with 0.1dB step, 0.2dB max. 0.1dB typ. high absolute attenator accuracy and 50dB attenuation dynamic range over whole band. It can be controlled through GUI user interface software via USB/Ethernet and can be applied in microwave test or integraed in microwave test system. Its stability and repetition can provde reliable test data in long term testing.

- Ultra wideband, 6-18GHz
- Ultra high accuracy, ultra high resolution
- No calibration required,
  high stability and high repeatability
- USB/Ethernet interface, Simple to usein
- Small size, built-in power module
- Cuotom design, frequency 0.5-40GHz
- Custom high dynamic range, up to 120dB

Outline Drawing

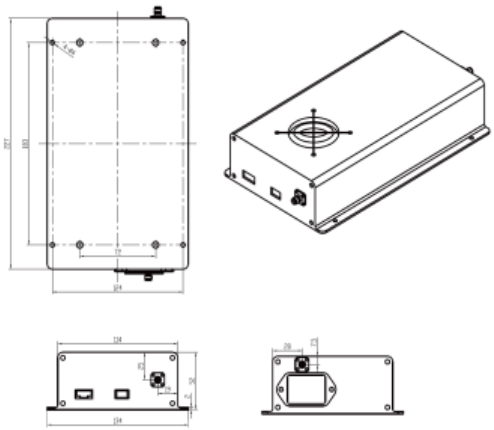

Electrical Specifications at 23±3°C

Parameter	Conditions	Min.	Typ.	Max.	Unit
Attenuation Range	0.1dB Step	0	-	50	dB
Attenuation Accuracy	@0~50dB	-	±0.1	±0.2	dB
Insertion Loss	@0dB	-	-	4.5	dB
Input Power (Max.)	@0dB	-	-	+20	dBm
VSWR	@0~50dB	-	-	2.3	:1
AC Input Voltage	-	100	-	240	VAC
Control Ports	USB/Ethernet				
RF In/Out Connectors	SMA Female				
Size	227 × 114 × 50 mm (Without Base Plate)				
Operating Temp.	0°C - 50°C				
Storage Temp.	-20°C - 70°C				

Ultra Wideband High Accuracy Programmable Attenuator

18~40GHz

MDA180400-50E ultra wideband high accuracy programmable attenuator is a compact and portable device, covering 18-40GHz with 0.1dB step, 0.2dB max. 0.1dB typ. high absolute attenator accuracy and 50dB attenuation dynamic range over whole band. It can be controlled through GUI user interface software via USB/Ethernet and can be applied in microwave test or integraed in microwave test system. Its stability and repetition can provde reliable test data in long term testing.

- Ultra wideband, 18-40GHz
- Ultra high accuracy, ultra high resolution
- No calibration required,
  high stability and high repeatability
- USB/Ethernet interface, simple to usein
- Small size, built-in power module
- Cuotom design, frequency 0.5-40GHz
- Custom high dynamic range, up to 120dB

Outline Drawing

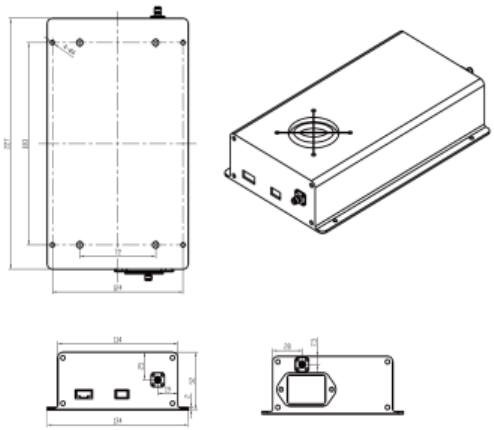

Electrical Specifications at 23±3°C

Parameter	Conditions	Min.	Typ.	Max.	Unit
Attenuation Range	0.1dB Step	0	-	50	dB
Attenuation Accuracy	@0~50dB	-	±0.1	±0.2	dB
Insertion Loss	@0dB	-	-	8.0	dB
Input Power (Max.)	@0dB	-	-	+10	dBm
VSWR	@0~50dB	-	-	2.2	:1
AC Input Voltage	-	100	-	240	VAC
Control Ports	USB/Ethernet				
RF In/Out Connectors	2.92mm Female				
Size	227 × 114 × 50 mm (Without Base Plate)				
Operating Temp.	0°C - 50°C				
Storage Temp.	-20°C - 70°C				

Ultra Wideband High Accuracy Programmable Phase Shifter

0.5~2GHz

MPS005020-E ultra wideband high accuracy programmable phase shifter is a compact and portable device, covering 0.5-2GHz with 0-360° phase range, 1° fine phase resolution and ±1° max., ±0.5° typ. absolute phase accuracy , It can be controlled through GUI user interface software via USB/Ethernet and can be applied in microwave test or integraed in microwave test system. Its stability and repetition can provde reliable test data in long term testing.

- Ultra wideband, 0.5-2GHz
- Ultra high accuracy, ultra high resolution
- No calibration required,
  high stability and high repeatability
- USB/Ethernet interface, simple to usein
- Small size, built-in power module
- Cuotom design, frequency 0.5-40GHz

Outline Drawing

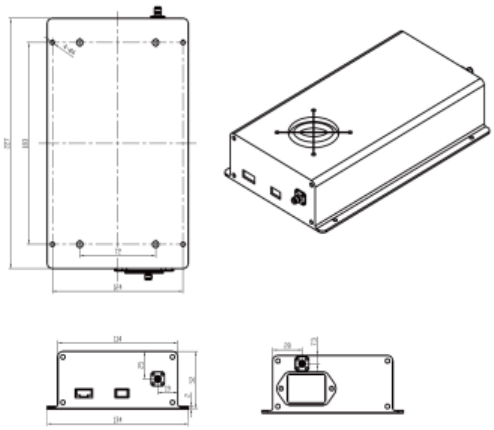

Electrical Specifications at 23±3°C

Parameter	Conditions	Min.	Typ.	Max.	Unit
Phase Shift Range	1° Step	0°	-	360°	Deg.
Phase Shift Step	-	1°	-	-	Deg.
Phase Shift Accuracy	At any single frequency	-	±0.5°	±1°	Deg.
Insertion Loss	-	-	-	14	dB
Input Power (Max.)	Performance no degradation	-	-	+7	dBm
Withstand power (Max.)	No damage	-	-	+30	dBm
VSWR	-	-	-	2.0	:1
Supply Voltage	-	100	-	240	VAC
Control Ports	USB/Ethernet				
RF In/Out Connectors	SMA Female				
Size	227 × 114 × 50 mm (Without Base Plate)				
Operating Temp.	0°C - 50°C				
Storage Temp.	-20°C - 70°C				

Ultra Wideband High Accuracy Programmable Phase Shifter

1.7~6GHz

MPS017060-E ultra wideband high accuracy programmable phase shifter is a compact and portable device, covering 2-6GHz, extended to 1.7GHz, with 0-360° phase range, 1° fine phase resolution and ±1° max., ±0.5° typ. absolute phase accuracy , It can be controlled through GUI user interface software via USB/Ethernet and can be applied in microwave test or integraed in microwave test system. Its stability and repetition can provde reliable test data in long term testing.

- Ultra wideband, 1.7-6GHz
- Ultra high accuracy, ultra high resolution
- No calibration required,
  high stability and high repeatability
- USB/Ethernet interface, simple to usein
- Small size, built-in power module
- Cuotom design, frequency 0.5-40GHz

Outline Drawing

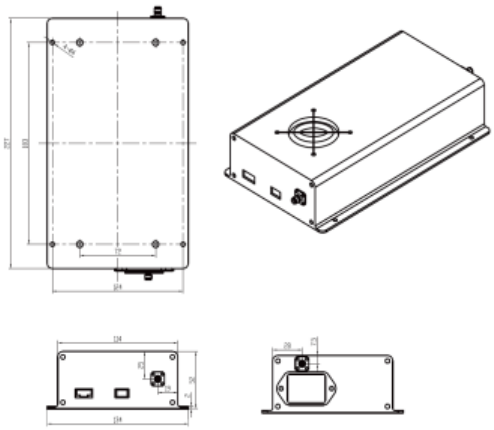

Electrical Specifications at 23±3°C

Parameter	Conditions	Min.	Typ.	Max.	Unit
Phase Shift Range	1° Step	0°	-	360°	Deg.
Phase Shift Step	-	1°	-	-	Deg.
Phase Shift Accuracy	At any single frequency	-	±0.5°	±1°	Deg.
Insertion Loss	-	-	-	12	dB
Input Power (Max.)	Performance no degradation	-	-	+20	dBm
Withstand power (Max.)	No damage	-	-	+30	dBm
VSWR	-	-	-	2.0	:1
Supply Voltage	-	100	-	240	VAC
Control Ports	USB/Ethernet				
RF In/Out Connectors	SMA Female				
Size	227 × 114 × 50 mm (Without Base Plate)				
Operating Temp.	0°C - 50°C				
Storage Temp.	-20°C - 70°C				

Ultra Wideband High Accuracy Programmable Phase Shifter

6~18GHz

MPS060180-E ultra wideband high accuracy programmable phase shifter is a compact and portable device, covering 6-18GHz with 0-360° phase range, 1° fine phase resolution and ±1° max., ±0.5° typ. absolute phase accuracy , It can be controlled through GUI user interface software via USB/Ethernet and can be applied in microwave test or integraed in microwave test system. Its stability and repetition can provde reliable test data in long term testing.

- Ultra wideband, 6-18GHz
- Ultra high accuracy, ultra high resolution
- No calibration required,
  high stability and high repeatability
- USB/Ethernet interface, simple to usein
- Small size, built-in power module
- Cuotom design, frequency 0.5-40GHz

Outline Drawing

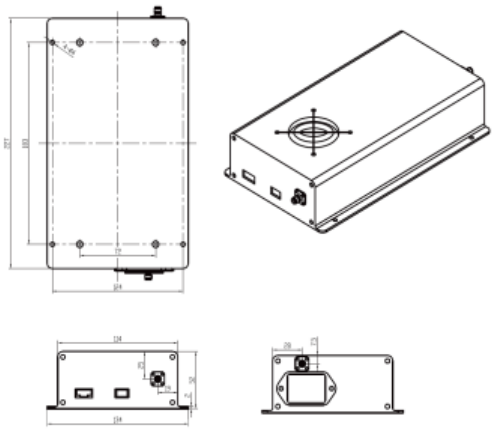

Electrical Specifications at 23±3°C

Parameter	Conditions	Min.	Typ.	Max.	Unit.
Phase Shift Range	1° Step	0°	-	360°	Deg.
Phase Shift Step	-	1°	-	-	Deg.
Phase Shift Accuracy	At any single frequency	-	±0.5°	±1°	Deg.
Insertion Loss	-	-	-	13	dB
Input Power (Max.)	Performance no degradation	-	-	+20	dBm
Withstand power (Max.)	No damage	-	-	+30	dBm
VSWR	-	-	-	2.1	:1
Supply Voltage	-	100	-	240	VAC
Control Ports	USB/Ethernet				
RF In/Out Connectors	SMA Female				
Size	227 × 114 × 50 mm (Without Base Plate)				
Operating Temp.	0°C - 50°C				
Storage Temp.	-20°C - 70°C				

Ultra Wideband High Accuracy Programmable Phase Shifter

18~40GHz

MPS180400-E ultra wideband high accuracy programmable phase shifter is a compact and portable device, covering 18-40GHz, with 0-360° phase range, 1° fine phase resolution and ±2° max., ±1° typ. absolute phase accuracy, It can be controlled through GUI user interface software via USB/Ethernet and can be applied in microwave test or integraed in microwave test system. Its stability and repetition can provde reliable test data in long term testing.

- Ultra wideband, 18-40GHz
- Ultra high accuracy, ultra high resolution
- No calibration required,
  high stability and high repeatability
- USB/Ethernet interface, Simple to usein
- Small size, built-in power module
- Cuotom design, frequency 0.5-40GHz

Outline Drawing

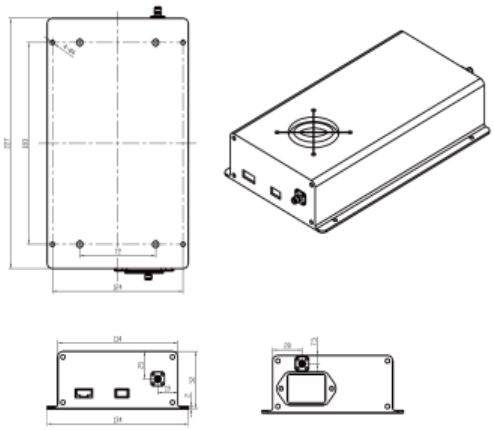

Electrical Specifications at 23±3°C

Parameter	Conditions	Min.	Typ.	Max.	Unit
Phase Shift Range	1° Step	0°	-	360°	Deg.
Phase Shift Step	-	1°	-	-	Deg.
Phase Shift Accuracy	At any single frequency	-	±1°	±2°	Deg.
Insertion Loss	-	-	-	16	dB
Input Power (Max.)	Performance no degradation	-	-	+20	dBm
Withstand power (Max.)	No damage	-	-	+30	dBm
VSWR	-	-	-	2.5	:1
Supply Voltage	-	100	-	240	VAC
Control Ports	USB/Ethernet				
RF In/Out Connectors	SMA Female				
Size	227 × 114 × 50 mm (Without Base Plate)				
Operating Temp.	0°C - 50°C				
Storage Temp.	-20°C - 70°C				

High Accuracy Programmable Amplitude & Phase Controller

0.5~2GHz

MPAC-005020-50E is a 0.5-2GHz high accuracy programmable phase & amplitude controller. It can achieve amplitude control step of 0.1dB at any one frequency point, absolute control accuracy of ±0.1dB typ., phase control step of 1°, absolute phase shift accuracy of ±1° typ.. MIcable's phase & amplitude controller covers 0.5-40GHz with segments of 0.5-2GHz, 0.6-4GHz, 2-6GHz, 6-18GHz, 18-40GHz and other customize bands can be available as well. They can be controlled through USB/Ethernet with user-friendly GUI and are designed to provide software interface for user to program and control per self-requirement. The applications include 5G signal simulator, massive MIMO channel simulation, 5G antenna OTA test, accurate beamforming producing and algorithm research, phase array antenna test, complicated signals environment producing and etc.

Features:

- Ultra wideband, 0.5-2GHz
- High resolution, phase: 1°, amplitude: 0.1dB
- Ultra high accuracy, phase: ±2° Max., ±1° Typ. amplitude: ±0.2dB Max., ±0.1dB Typ.
- Low Insertion loss: 20dB Max.
- USB/Ethernet control, ease to install and use

Electrical Specifications at 23±3°C

Parameter	Conditions	Min.	Typ.	Max.	Unit
Attenuation Range	0.1dB Step	0	-	50	dB
Attenuation Step	-	0.1	-	-	dB
Attenuation Accuracy	0-50 dB & 0-360°	-	±0.1	±0.2	dB
Phase Shift Range	1° Step	0°	-	360°	Deg.
Phase Shift Step	-	1°	-	-	Deg.
Phase Shift Accuracy	0-50 dB & 0-360°	-	±1°	±2°	Deg.
Insertion Loss	0dB & 0° Setting	-	-	18.5	dB
Input Power (Max.)	Performance no degradation	-	-	7	dBm
Withstand power (Max.)	No damage	-	-	+30	dBm
VSWR	-	-	-	1.9	:1
Supply Voltage	-	100	-	240	VAC
Control Ports	USB/Ethernet				
RF In/Out Connectors	SMA Female				
Size	227 × 114 × 50mm				
Operating Temp.	0°C - 50°C				
Storage Temp.	-20°C - 70°C				

High Accuracy Programmable Amplitude & Phase Controller

0.6~4GHz

MPAC-006040-60E is a 0.6-4GHz high accuracy programmable phase & amplitude controller. It can achieve amplitude control step of 0.25dB at any one frequency point, absolute control accuracy of ±0.5dB typ., phase control step of 1°, absolute phase shift accuracy of ±2° max. . MIcable's phase & amplitude controller covers 0.5-40GHz with segments of 0.5-2GHz, 0.6-4GHz, 2-6GHz, 6-18GHz, 18-40GHz and other customize bands can be available as well. They can be controlled through USB/Ethernet with user-friendly GUI and are designed to provide software interface for user to program and control per self-requirement. The applications include 5G signal simulator, massive MIMO channel simulation, 5G antenna OTA test, accurate beamforming producing and algorithm research, phase array antenna test, complicated signals environment producing and etc.

Features:

- Ultra wideband, 0.6-4GHz
- Ultra high absolute accuracy, phase ±2° Max., amplitude ±0.5dB Max.
- High resolution, phase: 1°, amplitude: 0.25dB
- USB/Ethernet control, ease to install and use

Electrical Specifications at 23±3°C

Parameter	Conditions	Min.	Typ.	Max.	Unit
Attenuation Range	0.25dB Step	0	-	60	dB
Attenuation Step	-	0.25	-	-	dB
Attenuation Accuracy	0-60 dB & 0-360°	-	-	±0.5	dB
Phase Shift Range	1°Step Min.	0°	-	360°	Deg.
Phase Shift Step	-	1°	-	-	Deg.
Phase Shift Accuracy	0-60 dB & 0-360°	-	-	±2°	Deg.
Insertion Loss	0dB & 0° Setting	-	-	31	dB
Input Power (Max.)	Performance no degradation	-	-	0	dBm
Withstand Power (Max.)	No damage	-	-	+20	dBm
VSWR	-	-	2	-	:1
Supply Voltage	-	100	-	240	VAC
Control Ports	USB/Ethernet				
RF In/Out Connectors	SMA Female				
Size	380 x 89 x 320mm				
Operating Temp.	10°C - 50°C				
Storage Temp.	-0°C - 70°C				

High Accuracy Programmable Amplitude & Phase Controller

2~6GHz

MPAC-020060-50E is a 2-6GHz extended to 1.7-6GHz high accuracy programmable phase & amplitude controller. It can achieve amplitude control step of 0.1dB at any one frequency point, absolute control accuracy of ±0.1dB typ., phase control step of 1°, absolute phase shift accuracy of ±1° typ.. MIcable's phase & amplitude controller covers 0.5-40GHz with segments of 0.5-2GHz, 0.6-4GHz, 2-6GHz, 6-18GHz, 18-40GHz and other customize bands can be available as well. They can be controlled through USB/Ethernet with user-friendly GUI and are designed to provide software interface for user to program and control per self-requirement. The applications include 5G signal simulator, massive MIMO channel simulation, 5G antenna OTA test, accurate beamforming producing and algorithm research, phase array antenna test, complicated signals environment producing and etc.

Features:

- Ultra wideband, 2-6GHz, extended to 1.7-6GHz
- High resolution, Phase: 1°, amplitude: 0.1dB
- Ultra high accuracy, phase: ±2° Max., ±1° Typ. amplitude: ±0.2dB Max., ±0.1dB Typ.
- Low Insertion loss: 17.5dB Max.
- USB/Ethernet control, ease to install and use

Electrical Specifications at 23±3°C

Parameter	Conditions	Min.	Typ.	Max.	Unit
Attenuation Range	0.1dB Step	0	-	50	dB
Attenuation Step	-	0.1	-	-	dB
Attenuation Accuracy	0-50 dB & 0-360°	-	±0.1	±0.2	dB
Phase Shift Range	1° Step	0°	-	360°	Deg.
Phase Shift Step	-	1°	-	-	Deg.
Phase Shift Accuracy	0-50 dB & 0-360°	-	±1°	±2°	Deg.
Insertion Loss	0dB & 0° Setting	-	-	17.5	dB
Input Power (Max.)	Performance no degradation	-	-	20	dBm
Withstand Power (Max.)	No damage	-	-	+30	dBm
VSWR	-	-	-	2.0	:1
Supply Voltage	-	100	-	240	VAC
Control Ports	USB/Ethernet				
RF In/Out Connectors	SMA Female				
Size	227 × 114 × 50mm				
Operating Temp.	0°C - 50°C				
Storage Temp.	-20°C - 70°C				

High Accuracy Programmable Amplitude & Phase Controller

6~18GHz

MPAC-060180-60E is a 6-18GHz high accuracy programmable phase & amplitude controller. It can achieve amplitude control step of 0.1dB at any one frequency point, absolute control accuracy of ±0.1dB typ., phase control step of 1°, absolute phase shift accuracy of ±1° typ.. MIcable's phase & amplitude controller covers 0.5-40GHz with segments of 0.5-2GHz, 0.6-4GHz, 2-6GHz, 6-18GHz, 18-40GHz and other customize bands can be available as well. They can be controlled through USB/Ethernet with user-friendly GUI and are designed to provide software interface for user to program and control per self-requirement. The applications include 5G signal simulator, massive MIMO channel simulation, 5G antenna OTA test, accurate beamforming producing and algorithm research, phase array antenna test, complicated signals environment producing and etc.

Features:

- Ultra wideband, 6-18GHz
- High resolution, phase: 1°, amplitude: 0.1dB
- Ultra high accuracy, phase: ±2° Max., ±1° Typ. amplitude: ±0.2dB Max., ±0.1dB Typ.
- Low Insertion loss: 16dB Max.
- USB/Ethernet control, ease to install and use

Electrical Specifications at 23±3°C

Parameter	Conditions	Min.	Typ.	Max.	Unit
Attenuation Range	0.1dB Step	0	-	60	dB
Attenuation Step	-	0.1	-	-	dB
Attenuation Accuracy	0-60dB & 0-360°	-	±0.1	±0.2	dB
Phase Shift Range	1° Step	0°	-	360°	Deg.
Phase Shift Step	-	1°	-	-	Deg.
Phase Shift Accuracy	0-60 dB & 0-360°	-	±1°	±2°	Deg.
Insertion Loss	0dB & 0° Setting	-	-	16	dB
Input Power (Max.)	Performance no degradation	-	-	20	dBm
Withstand Power (Max.)	No damage	-	-	+30	dBm
VSWR	-	-	-	1.8	:1
Supply Voltage	-	100	-	240	VAC
Control Ports	USB/Ethernet				
RF In/Out Connectors	SMA Female				
Size	227 × 114 × 50mm				
Operating Temp.	0°C - 50°C				
Storage Temp.	-20°C - 70°C				

High Accuracy Programmable Amplitude & Phase Controller

18~40GHz

MPAC-180400-50E is a 18-40GHz high accuracy programmable phase & amplitude controller. It can achieve amplitude control step of 0.1dB at any one frequency point, absolute control accuracy of ±0.1dB typ., phase control step of 1°, absolute phase shift accuracy of ±1° typ.. MIcable's phase & amplitude controller covers 0.5-40GHz with segments of 0.5-2GHz, 0.6-4GHz, 2-6GHz, 6-18GHz, 18-40GHz and other customize bands can be available as well. They can be controlled through USB/Ethernet with user-friendly GUI and are designed to provide software interface for user to program and control per self-requirement. The applications include 5G signal simulator, massive MIMO channel simulation, 5G antenna OTA test, accurate beamforming producing and algorithm research, phase array antenna test, complicated signals environment producing and etc.

Features:

- Ultra wideband, 18-40GHz
- High resolution, phase: 1°, amplitude: 0.1dB
- Ultra high accuracy, phase: ±2° Max., ±1° Typ. amplitude: ±0.2dB Max., ±0.1dB Typ.
- Low Insertion loss: 27dB Max.
- USB/Ethernet control, ease to install and use

Electrical Specifications at 23±3°C

Parameter	Conditions	Min.	Typ.	Max.	Unit
Attenuation Range	0.1dB Step	0	-	50	dB
Attenuation Step	-	0.1	-	-	dB
Attenuation Accuracy	0-50 dB & 0-360°	-	±0.1	±0.2	dB
Phase Shift Range	1° Step	0°	-	360°	Deg.
Phase Shift Step	-	1°	-	-	Deg.
Phase Shift Accuracy	0-50 dB & 0-360°	-	±1°	±2°	Deg.
Insertion Loss	0dB & 0° Setting	-	-	27	dB
Input Power (Max.)	Performance no degradation	-	-	+20	dBm
Withstand Power (Max.)	No damage	-	-	+30	dBm
VSWR	-	-	-	2.5	:1
Supply Voltage	-	100	-	240	VAC
Control Ports	USB/Ethernet				
RF In/Out Connectors	2.92mm Female				
Size	227 × 114 × 50mm				
Operating Temp.	0°C - 50°C				
Storage Temp.	-20°C - 70°C				

Multi-Channel High Accuracy Amplitude & Phase Control Matrices

Custom Multi-Channel Arbitrary

(16-Channel high accuracy amplitude & phase control matrix)

(8-Channel high accuracy amplitude & phase control matrix)

MIcable's 8-channel & 16-channel high accuracy amplitude & phase control matrices can cover an ultra-wide frequency range with a single model. Each channel can be independently controlled with precise amplitude and phase, with 0.1dB amplitude step, 0-50dB control range, 1° phase step, and 0-360° phase shift range. It can be controlled by USB, has a simple and convenient GUI interface control program, and also provides DLL for users to program by themselves.

Custom designs are available with frequency range & amplitude control range of this series of products, such as the operating frequency range 0.2-3GHz, 0.5-2GHz, 2-6GHz, 6-18GHz, 18-40GHz, 24-40GHz, etc, amplitude control range 120dB max. optional.

Features:

- Accurate independent adjustment of 5G signal amplitude and phase
- Providing the signal environment to doppler shift motion simulation
- No external VNA calibration required, long-term stable performance
- Flexible to achieve arbitrary configuration and channel MIMO requirment
- Wide instantaneous bandwidth: 400MHz-2GHz

Application:

- 5G beamforming algorithm research simulation and verification
- 5G signal environment simulation
- OTA testing and evaluation of 5G antenna array performance
- Phased array antenna measurements
- Realistic simulation of signal fading, path, delay and motion

Electrical Specifications at 23±3°C

Model	MPAM-1X8-017060-50U	MPAM-1×16-017060-50U	MPAM-1×8-240400-50U
Channel Number	8	16	8
Freq. Range (GHz)	1.7-6	1.7-6	24-40
Attenuation Range (dB)	50 (30-100 OPT)	50 (30-100 OPT)	50 (30-100 OPT)
Attenuation Step (dB)	0.1	0.1	0.1
Attenuation Accuracy (dB) Max.	±0.2	±0.2	±0.2
Phase Shift Range (Deg.)	360°	360°	360°
Phase Shift Step (Deg.)	1°	1°	1°
Phase Shift Accuracy (Deg.) Max.	±2°	±2°	±2°
Insertion Loss (dB)	28	32	39
input/Output VSWR	1.6:1 / 2:1	1.6:1 / 2:1	2:1 / 2.2:1
Control Ports	USB (Ethernet OPT)	USB (Ethernet OPT)	USB (Ethernet OPT)
Power Supply	100-240VAC	100-240VAC	100-240VAC

8-Channel High Accuracy Fading Simulator

Custom Multi-Channel Arbitrary

small size, custom design are available

MIcable's 8-channel high accuracy fading simulator can cover an ultra-wide frequency range with a single model. Each channel can be independently controlled with precise amplitude, with 0.1dB amplitude step. Custom designs are available with frequency range from 0.5~40GHz or higher frequency, such as 0.5-8GHz, 6-18GHz, 18-40GHz, or other frequency segments, amplitude attenuation range of 30-120dB optional. It can be controlled by USB, has a simple and convenient GUI interface control program, and also provides DLL for users to program by themselves.

Features:

- Flexible frequency combination: 0.5-8GHz, 2-18GHz, 6-18GHz, 18-40GHz
- Customized channel number, USB control

Application:

- Transmission spatial fading simulation for wireless communication
- Transmission channel fading simulation for mobile communication
- Automated sensitivity test for mobile communication receivers
- Multi-channels amplitude control, configuraing with switch matrix
- Integrated module amplitude control

Electrical Specifications at 23±3°C

Model	MAT-8-8-005080	MAT-8-8-060180	MAT-8-8-180400
Freq. Range (MHz)	500-8000	6000-18000	18000-40000
Attenuation Range (dB)	60 (50-100 OPT)	60 (50-100 OPT)	50 (50-100 OPT)
Attenuation Step (dB)	0.1	0.1	0.1
Attenuation Accuracy (dB) Max.	±0.2	±0.2	±0.2
inputVSWR (:1)Max.	2.0	2.5	2.5
Input Power (dBm)	10	10	10
Insertion Loss (dB) Typ.	7.0	9.0	13.0
Control Ports	USB (Ethernet OPT)	USB (Ethernet OPT)	USB (Ethernet OPT)
Power supply	100-240VAC	100-240VAC	100-240VAC

Ultra Wideband Beamforming High Accuracy Butler Matrices

- Frequency up to 67GHz
- Diversified phase distributions & I/O structures, up to 64×16 matrix crossover
- Excellent phase accuracy, amplitude unbal., VSWR & insertion loss
- Custom-design & narrow band is available

— Test curve of SA-07-4B020060 —

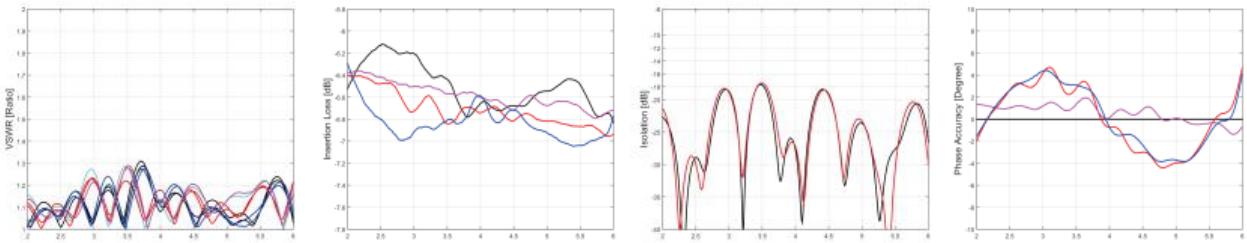

Specifications

P/N	Structure	Freq. Range (GHz)	VSWR Max. (:1)	Insertion Loss* Max. (dB)	Amplitude Unbal. Max. (dB)	Amplitude Flatness Max. (dB)	Phase Accuracy Max. (Deg.)	Isolation Min. (dB)
SA-07-4B007022	4×4	0.7-2.2	1.3	7.8	±0.8	±0.8	±8	16
		0.7-0.915	1.2	7.2	±0.5	±0.5	±5	18
		1.427-1.785	1.3	7.5	±0.6	±0.5	±6	16
		1.85-2.2	1.3	7.8	±0.6	±0.6	±6	16
SA-07-4B020060	4×4	2.0-6.0	1.5	7.8	±0.9	±0.8	±8	14
		2.4-2.5	1.4	7.3	±0.5	±0.3	±4	15
		5.18-5.83	1.5	7.7	±0.6	±0.4	±5	14
SA-07-4B020080	4×4	2.4-2.5	1.4	7.3	±0.5	±0.3	±4	14
		5.18-5.83	1.5	7.7	±0.6	±0.4	±5	13
		5.9-7.25	1.5	7.8	±0.7	±0.5	±6	13
SA-07-8B020060	8×8	2.0-6.0	1.6	12.0	±1.2	±1.2	±12	12
		2.4-2.5	1.5	11.4	±0.7	±0.5	±8	13
		5.18-5.83	1.6	12.0	±0.9	±0.6	±10	12
SA-07-8B020080	8×8	2.4-2.5	1.5	11.2	±0.6	±0.4	±8	13
		5.18-5.83	1.5	11.6	±0.8	±0.5	±10	12
		5.9-7.25	1.55	11.8	±0.9	±0.7	±12	12
SA-07-16B020060	16×16	2.3-2.7	1.6	17.0	±1.2	±0.8	±12	10
		3.3-3.8	1.6	18.0	±1.2	±0.8	±12	9
		4.4-5	1.7	19.0	±1.2	±0.8	±14	8
SA-07-16B023038	16×16	2.3-2.7	1.5	15.0	±1.0	±0.8	±8	12
		3.3-3.8	1.6	16.0	±1.0	±0.8	±10	10
SA-07-3216B017022	32×16	1.7-2.2	1.5	18.4	±0.9	±1.0	±5	13
SA-07-3216B033038	32×16	3.3-3.8	1.6	19.6	±1.0	±1.2	±6	12

*Theoretical I.L. Included

05

Wideband/Ultra Wideband Microwave Millimeter Wave Amplifier

Microwave Millimeter Wave Amplifier Series

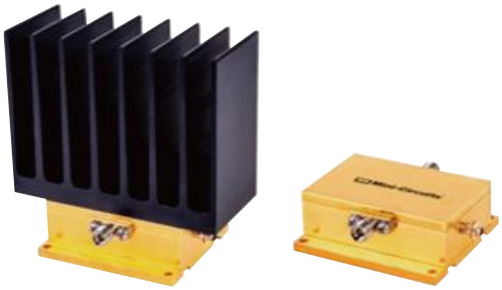

- Ultra wideband freq. range, covering 0.05-43500MHz
- Ultra low noise figure, high dymanic range
- High gain, high P1dB
- Simple to usein, heatsink optional
- Internal anti over-current/over-voltage/ current surge protection

Coxial low noise,ultra wideband, high gain microwave millimeter-wave amplifiers, frequency up to 43.5GHz. installed with internal DC-DC module, signal phase power supply and with various of DC protection functions to support a wide range of power support. It is the best choice for optical module, 5G, millimeter wave systems.

Specifications

Model	Freq. Range (MHz)	Gain (dB)Typ.	Noise Figure (dB)Typ.	P1dB Output Power (dBm)Typ.	Output IP3 (dBm)Typ.	Operating Voltage (V)	Supply Current (mA)	Configuration
ZVA-183G-S+	500-18000	38.0	3.0	25.0	36.0	15	770	HEATSINK
ZVA-183W-S+	100-18000	28.0	3.0	26.0	34.5	15	625	HEATSINK
ZVE-3W-183+	5900-18000	35.0	5.5	34.0	44.0	15	2200	HEATSINK
ZX60-183A-S+	6000-18000	28.0	5.0	18.0	27.0	5	260	-
ZX60-06183LN+	6000-18000	25.0	2.1	11.0	24.0	5	64	-
ZVA-213UWX+	100-20000	14.0	3.0	16.0	29.0	+12, -5	84	-
ZX60-02203+	2000-20000	21.5	6.5	14.6	28.0	5	155	-
ZVA-213-S+	800-21000	26.0	3.0	24.0	33.0	12	400	HEATSINK
ZVM-273HP+	13000-26500	14.5	9.0	25.0	34.0	12	559	HEATSINK
ZVE-323LN-K+	18000-32000	20.0	3.0	10.0	23.0	12	50	HEATSINK
ZVA-403GX+	0.05-40000	11.0	4.5	11.0	21.0	5	100	-
ZVE-403-K+	26000-40000	22.0	9.0	19.0	21.0	12	300	HEATSINK
ZVA-443HGX+	10-43500	33.0	3.5	9.0	18.0	15	225	-
ZVA-443X+	0.05-43500	11.0	4.5	10.0	22.0	5	80	-
ZVA-02443HP+	2000-43500	37.0	3.5	17.0	25.0	15	130	HEATSINK
ZVA-24443G1+	24000-43500	45.0	1.7	20.0	27.0	15	160	HEATSINK

High Power Microwave Amplifier

- **Ultra wideband, multi-octave, covering communication bands**
- **High efficiency, better linearity, suitable for wideband modul ated signal**
- **Full protection functions, over-excited protection, DC protection, over-temperature protection and over-load mismatch protection and etc.**
- **ALC & MGC functions available**
- **Modular design, small size, light weight, easy to troubleshoot**
- **Custom-design available, quick delivery**

MIcable has built up the high power microwave amplifiers product line which applies wideband high efficiency, high linearity matching, pre-distortion and other design techniques. The amplifiers frequency range covers 20-40000MHz and output power reaches up to kilowatt. Combining with reliable RF microwave production process and standardized process management, the amplifiers are with good RF performance and excellent reliability and consistency.

The built-in control, monitoring and protection functions are offered and it is designed for high power CW or pulse system applications, such as 5G,LTE,WIFI and other related system, EMC test & phased array systems.

Specifications

Model	Freq. Range (MHz)	Saturated Power (W) Typ./Min.	P1dB (W) Typ./Min.	Gain (dB) Typ./Min.	Gain Flatness (dB) Max.	2nd /3rd Harmonics dBc Max.	Power Consumpton (W)	Dimension	Type
MPA-002020S37	200-2000	12/10	6.3/5	42/41	±2	-15/-15 Typ.	75	163 × 25 × 86	Module
MPA-003020S47	380-2000	64/50	25/20	48/46	±2	-12/-12	210	163 × 25 × 86	Module
MPA-007027S50	700-2700	100/80	56/45	50 Typ.	±1.6	-15/-15	440	180 × 25 × 140	Module
MPA-008030S51	800-3000	120/100	50/40	51/50	±1.5	-15/-18	450	180 × 25 × 140	Module
MPA-010060S47	1000-6000	50/40	20/10	47/46	±2.5	-12/-12	240	170 × 25 × 165	Module
MPA-010060S50	1000-6000	100/70	40/20	50/48	±2.5	-10/-15	480	240 × 25 × 240	Module
MPA-017060S51	1700-6000	120/100	25/16	51/50	±1.6	-13/-15	550	240 × 25 × 240	Module
MPA-020060S50	2000-6000	100/80	25/18	50/49	±1.5	-13/-20	500	240 × 25 × 240	Module
MPA-020180S40	2000-18000	15/10	2/1	41/40	±2.5	-12 Typ.	230	160 × 25 × 140	Module
MPA-020180S42	2000-18000	15/12	N/A	42 Typ.	±1.5	-15/-20	126	160 × 25 × 140	Module
MPAR-004020S47	450-2000	64/50	32/25	48/46	±2	-13/-15	400	19", 3U	Rack
MPAR-004020S50	450-2000	100/80	64/50	51/49	±2	-13/-15	550	19", 3U	Rack
MPAR-005060S50	500-6000	125/100	32/25	51/50	±2	-12/-15	600	19", 3U	Rack
MPAR-007027S47	700-2700	64/50	40/28	47/46	±1.5	-12/-20	350	19", 3U	Rack
MPAR-007027S50	700-2700	100/80	70/56	50/49	±1.5	-15/-20	550	19", 3U	Rack
MPAR-007060P41	700-6000	25/16	15/12	45/42	±2	-12/-15	500	19", 3U	Rack
MPAR-008030S50	800-3000	100/80	64/50	50/49	±1.5	-15/-20	550	19", 3U	Rack
MPAR-009060S46	900-6000	40/30	25/16	46/44	±2	-12/-15	340	19", 3U	Rack
MPAR-010060S50	1000-6000	100/64	40/25	50/48	±2.5	-10/-15	700	19", 3U	Rack
MPAR-017060S47	1700-6000	50/40	30/25	48/46	±1.5	-12/-15	400	19", 3U	Rack
MPAR-017060S50	1700-6000	100/80	50/40	50/49	±1.5	-12/-18	600	19", 3U	Rack
MPAR-017060S53	1700-6000	250/200	120/80	55/53	±1.6	-15/-20	1500	19", 5U	Rack
MPAR-017027S57	1700-2700	600/500	250/200	58/56	±1.5	-30/-30	2700	19", 5U	Rack
MPAR-020060S50	2000-6000	100/80	50/40	50/48	±1.5	-13/-20	600	19", 3U	Rack
MPAR-020060S53	2000-6000	220/200	120/100	55/53	±1.5	-15/-20	1450	19", 5U	Rack
MPAR-020080S47	2000-8000	70/45	32/12	53/51	±3	-8/-15	800	19", 3U	Rack
MPAR-020180S45	2000-18000	35/28	25/16	45 Typ.	±2.5	-12/-15	800	19", 5U	Rack
MPAR-060180S45	6000-18000	30/20	20/15	53 Typ.	±2.5	-12/-12	600	19", 3U	Rack
MPAR-060180S48	6000-18000	70/50	N/A	49 Typ.	±2.5	-12/-12	1000	19", 5U	Rack
MPAR-060180S50	6000-18000	100/80	N/A	50 Typ.	±2.5	-12/-12	1900	19", 5U	Rack
MPAR-060180S51-A	6000-18000	125/100	N/A	53/50	±1.5	-9/-15	1600	19", 5U	Rack
MPAR-265400S43	26500-40000	20/16	10/5	43 Typ.	±4.5	N/A	550	19", 4U	Rack

06

Wideband/Ultra Wideband Signal Source

Ultra Wideband Arbitrary Modulation Signal Source

MSGM-002400 is an ultra wideband arbitrary modulation signal source, with a frequency range of 0.25-40GHz, and built-in arbitrary waveform generator, which can generate any waveforms such as pulse, triangular waves, sawtooth waves. It supports AM/FM modulation, where the linear frequency modulation bandwidth can reach 2GHz, and supports 0-360° phase modulation. Built-in fast control board (control instruction rate 1Msps), and memory card can save waveform files. The user can control the signal source through USB to generate the required output signal, or generate various broadband modulation signals through the input waveform file.

In addition, the signal source supports external analog modulation input, which helps users to select and design the test system flexibly. Moreover, it has the complete locking function during frequency modulation, which can ensure the frequency accuracy and other performance remain unchanged during modulation, and will not produce center frequency drift and nonlinear modulation.

Features:

- Output frequency: 0.25-40GHz
- Frequency modulation with 2 GHz instantaneous bandwidth
- Amplitude modulation with 50 dB average dynamic range
- Pulse modulation with 60 dB on/off ratio
- Fast control card with 1 Msps arbitrary waveform generator (*)
- On-board memory for storing the waveform
- Alternative phase modulation (replacing frequency modulation)

(*) Every 1 micro-second a new FM word, attenuation word and on/off command is assigned. The user can upload any arbitrary desired waveform via a USB interface and store in the on-board memory. Then the control board will play the waveform in a cyclic manner.

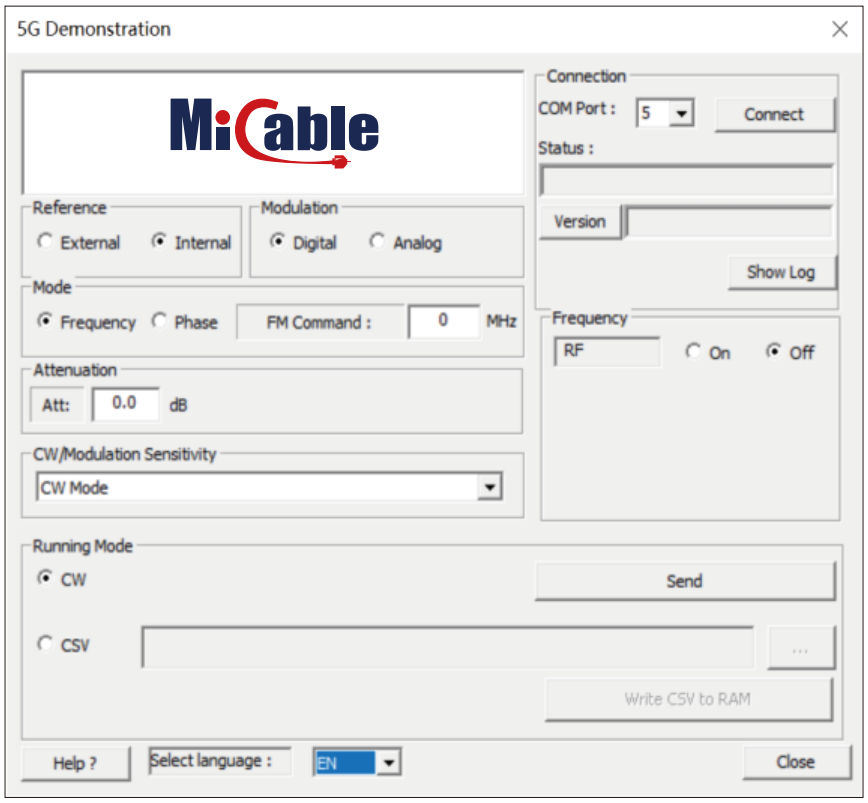

Specifications

1 Output Frequency	0.25-2 GHz			2-18GHz			18-40GHz		
2 Frequency Step(MHz)	0.0125			0.1			0.2		
3 Frequency Accuracy (ppm)	±10								
4 Output Freq (dBm)@0dB Attenuation	-5~0			1~8			2~9		
5 Output Frequency Conrol	-			-			-		
5.1 Attenuation Range (dB)	0~32			0~60			0~60		
5.2 Attenation Step (dB) Min.	0.5			0.0625			0.0625		
5.3 Attenuation Accuracy	-								
6 Phise Noise (dBc/Hz)	(Built-in reference crystal oscillator)								
@100 Hz	-77			-59			-53		
@1 kHz	-102			-84			-78		
@10 kHz	-114			-96			-90		
@100 kHz	-114			-96			-90		
@1 MHz	-114			-96			-90		
@10 MHz	-117			-99			-93		
7 External Reference Input	-								
7.1 Reference Frequency (MHz)	100								
7.2 Input Power (dBm)	0±2								
7.3 Phase Noise(dBc/Hz)	-								
@ 100 Hz	-125								
@ 1 kHz	-140								
@ 10 kHz	-155								
@ 100 kHz	-160								
8 Fequency Source Noise Floor(dBc/Hz)	-150			-150			-144		
9 Setup Time (us) Note1				100-120					
10 Dewell Time (us) Note2	1								
11 Modulation	-			-			-		
11.1 Modulation Bandwidth (MHz)	8	64	128	64	256	1024	128	512	2048
11.2 Modulation Resolution (kHz)	7.81	31.25	125	62.5	250	1000	125	500	2000
12 Analog Modulation Input Note3	-								
12.1 Input Voltage (V)	-1~+1								
12.2 Modulation Sensibility (MHz/V)	4	16	64	32	128	512	64	256	1024
12.3 Phase modulation sensitivity (Deg/V)	180								
12.4 Input Impedance (Ω)	50								
13 AC Input Power	200-240VAC/50Hz								
14 Operating Temp (°C)	0~+45								
15 Storage Temp (°C)	-20~+70								

Note 1 Transition time between 2 output states. During the transition, RF output is turned off to avoid transient outputs.

Note 2 Duration of each signal point in a sweep or hop sequence set by user. Default is minimum dwell time.

Note 3 The modulation sensitivity of analog modulation input is set by the user in the GUI software interface.

07

Test Cable Assemblies

T26 Series DC~26.5GHz

High Reliable & Durable Test Cable Assemblies

(Suited for high precision and frequent tests in production line and labs)

Features & Advantage:

- Super flexible & durable
- High shielding effectiveness <-90dB
- Excellent phase & amplitude stability over flexure
- Outstanding return loss performance
- Qualified for over 150K flex cycles

Part Numbering Code

T26 - 47 - 47 - 1M

- 1M — *Length (in meter)*
- 47 (second) — *Connector code of end B*
- 47 (first) — *Connector code of end A*
- T26 — *Cable code*

Application:

- RF field test
- High volume production test
- Mobile / IPAD / Wifi / Base station testing
- Research & development labs
- 5G test
- Point to point equipment test

Electrical :

Outer Diameter	5.2mm
Jacket	PUR
Velocity of Propagation	76%
Operating Frequency	26.5GHz
Impedance	50Ω
Mini. Bending Radius	25mm
Insertion Loss(Max.)	2.52dB/m@26.5GHz
Shielding Effectiveness	<-90dB
Phase Stability over Flex.	±2°@26.5GHz
Amplitude Stability over Flex.	<±0.04dB@26.5GHz
Operating Temp.	23±5°C
Storage Temp.	-40~+50°C

Connector Code

Type	SMA Male
P/N	SMA-J31-00
Code	011
Mat.	Stainless steel
Freq.	26.5GHz
VSWR	1.25:1

Type	SMA Male RA
P/N	SMA-JW-10-00
Code	050
Mat.	Stainless steel
Freq.	26.5GHz
VSWR	1.25:1

Type	SMA Female
P/N	SMA-K-06-00A
Code	020
Mat.	Stainless steel
Freq.	26.5GHz
VSWR	1.25:1

Type	3.5 Male
P/N	3.5-J-14-00
Code	47
Mat.	Stainless steel
Freq.	26.5GHz
VSWR	1.20:1

Type	3.5 Male
P/N	3.5-J-27-00
Code	470
Mat.	Stainless steel
Freq.	26.5GHz
VSWR	1.30:1

Type	3.5 Male RA
P/N	3.5-JW-01-00
Code	62
Mat.	Stainless steel
Freq.	26.5GHz
VSWR	1.25:1

Type	3.5 Female
P/N	3.5-K-04-00
Code	60
Mat.	Stainless steel
Freq.	26.5GHz
VSWR	1.25:1

Type	N Male
P/N	N-J-17-00
Code	071
Mat.	Stainless steel
Freq.	18GHz
VSWR	1.25:1

Type	N Male RA
P/N	N-JW-12-00
Code	500
Mat.	Stainless steel
Freq.	18GHz
VSWR	1.25:1

Type	N Female
P/N	N-KT26-01
Code	08
Mat.	Stainless steel
Freq.	18GHz
VSWR	1.25:1

T40 Series DC~40GHz

High Density and Reliable Test Cable Assemblies

(Suited for high precision millimeter wave tests in production line and labs)

Features & Advantage:

- Excellent phase & amplitude stability over flexure
- High shielding effectiveness <-90dB
- Construction is very robust, employing an advanced strain relief system
- Excellent attenuation performance
- Super flexible & durable
- Anti-compression & distortion

Part Numbering Code

T40 - 39 - 39 - 1M

- 1M — *Length (in meter)*
- 39 — *Connector code of end B*
- 39 — *Connector code of end A*
- T40 — *Cable code*

Application:

- Test equipment connection
- High volume production / Lab test

Electrical :

Outer Diameter	3.6mm
Jacket	FEP
Velocity of Propagation	74%
Operating Frequency	40GHz
Impedance	50Ω
Mini. Bending Radius	14.4mm
Insertion Loss(Max.)	2.92dB/m@40GHz
Shielding Effectiveness	<-90dB
Phase Stability over Flex.	±3°@40GHz
Amplitude Stability over Flex.	<±0.06dB@40GHz
Operating Temp.	23±5°C
Storage Temp.	-40~+50°C

Connector Code

Type	2.92 Male
P/N	2.92-J-11-00
Code	400
Mat.	Stainless steel
Freq.	40GHz
VSWR	1.25:1

Type	2.92 Female
P/N	2.92-K-06-00
Code	460
Mat.	Stainless steel
Freq.	40GHz
VSWR	1.25:1

Type	2.4 Male
P/N	2.4-J-04-00
Code	39
Mat.	Stainless steel
Freq.	40GHz
VSWR	1.25:1

Type	2.4 Female
P/N	2.4-K-04-00
Code	48
Mat.	Stainless steel
Freq.	40GHz
VSWR	1.25:1

T50 Series DC~50GHz

High Density and Reliable Test Cable Assemblies

(Suited for high precision millimeter wave tests in production line and labs)

Features & Advantage:

- Excellent phase & amplitude stability over flexure
- High shielding effectiveness <-90dB
- Construction is very robust, employing an advanced strain relief system
- Excellent attenuation performance
- Super flexible & durable
- Anti-compression & distortion

Part Numbering Code

T50 - 39 - 39 - 1M

- 1M — *Length (in meter)*
- 39 (second) — *Connector code of end B*
- 39 (first) — *Connector code of end A*
- T50 — *Cable code*

Application:

- High volume production / lab test
- Test equipment connection

Electrical :

Outer Diameter	3.6mm
Jacket	FEP
Velocity of Propagation	74%
Operating Frequency	50GHz
Impedance	50Ω
Mini. Bending Radius	14.4mm
Insertion Loss(Max.)	3.29dB/m@50GHz
Shielding Effectiveness	<-90dB
Phase Stability over Flex.	±4°@50GHz
Amplitude Stability over Flex.	<±0.08dB@50GHz
Operating Temp.	23±5°C
Storage Temp.	-40~+50°C

Connector Code

Type	2.4 Male
P/N	2.4-J-04-00
Code	39
Mat.	Stainless steel
Freq.	50GHz
VSWR	1.30:1

Type	2.4 Female
P/N	2.4-K-04-00
Code	48
Mat.	Stainless steel
Freq.	50GHz
VSWR	1.30:1

T110 Series DC~110GHz

High Reliability Test Cable Assemblies

(Suitable for production line / lab testing)

Features & Advantage:

- Rugged configuration with super flexible stainless steel armor
- Negligible changes of phase & amplitude over flexure
- Excellent attenuation performance
- Double shielded prevention by high-shielding cable & armor (shielding effectiveness <-95dB)
- Guard against from salt spray, corrosion, extrusion & distortion
- Wide range of operation temp. at -65～+165°C

Part Numbering Code

T110 - 1Y - 1Y - 1M

- Length (in meter)
- Connector code of end B
- Connector code of end A
- Cable code

Application:

- Production line / Lab testing
- MmWave equipment / Test instruments / System connections

Electrical :

Outer Diameter	3mm
Jacket	SS316 Stainless Steel
Velocity of Propagation	78.7%
Operating Frequency	110GHz
Impedance	50Ω
Min. Bending Radius	25mm
VSWR(:1)	1.50@110GHz
Insertion Loss(Max.)	15dB/m@110GHz
Shielding Effectiveness	<-95dB
Phase Stability over Flex.	±8°@110GHz
Amplitude Stability over Flex.	<±0.10dB@110GHz
Operating Temp.	-65~+165°C
Storage Temp.	-65~+165°C

Connector Code

Type	1.0 Male
P/N	1.0-J-01-00
Code	1Y
Mat.	Stainless steel
Freq.	110GHz
VSWR	1.40:1

Type	1.0 Female
P/N	1.0-K-01-00
Code	1Z
Mat.	Stainless steel
Freq.	110GHz
VSWR	1.40:1

T40E Series DC~40GHz

Wide Temperature Range Test Cable Assemblies

(Suited for high and low temperature cycling / Thermal shock tests)

Features & Advantage:

- Excellent machanical performance & phase stability over temp.
- High shielding effectiveness & outstanding attenuation performance
- Construction is very robust, employing an advanced strain relief system
- Wide range of operation temp. at -65～+165°C

Part Numbering Code

T40E - 40 - 40 - 1M

- 1M — *Length (in meter)*
- 40 — *Connector code of end B*
- 40 — *Connector code of end A*
- T40E — *Cable code*

Application:

- High and low temperature cycling / Thermal shock tests for production line/labs
- High-density test equipment connection
- High volume production test

Electrical:

Outer Diameter	3.6mm
Jacket	FEP
Velocity of Propagation	85%
Operating Frequency	40GHz
Impedance	50Ω
Min. Bending Radius	20mm
Insertion Loss(Max.)	2.61dB/m@40GHz
Shielding Effectiveness	<-90dB
Phase Stability over Flex.	±4°@40GHz
Amplitude Stability over Flex.	<±0.10dB@40GHz
Operating Temp.	-65 ～ +165°C
Storage Temp.	-65 ～ +165°C

Connector Code

Type	2.92 Male
P/N	2.92-J-03-00
Code	40
Mat.	Stainless steel
Freq.	40GHz
VSWR	1.30:1

Type	2.92 Male
P/N	2.92-J-18-00
Code	40R
Mat.	Stainless steel
Freq.	40GHz
VSWR	1.30:1

Type	2.92 Female
P/N	2.92-K-01-00
Code	46
Mat.	Stainless steel
Freq.	40GHz
VSWR	1.35:1

Type	2.4 Male
P/N	2.4-J-03-00
Code	39
Mat.	Stainless steel
Freq.	40GHz
VSWR	1.30:1

AT26 Series DC~26.5GHz

VA Armor Protected Test Cable Assemblies

(Qualified by over 300K flex cycles, well suited for repeat tests)

Features & Advantage:

- Flexible & durable, long life cycle
- Reinforced connector, robust protection & ideal strain relief
- Multilayer armor structure to prevent cable from water, dust, extrusion & distortion
- Excellent phase & amplitude stability over bending, shaking & torsion
- Ideal VSWR & measurement accuracy

Part Numbering Code

AT26 - 47 - 47 - 1M

- 1M — *Length (in meter)*
- 47 (second) — *Connector code of end B*
- 47 (first) — *Connector code of end A*
- AT26 — *Cable code*

Application:

- RF field test
- High volume production test
- Point to point equipment test
- Mobile / IPAD / WIFI / Base station testing
- Research & development labs

Electrical:

Outer Diameter	8mm
Armor Structure	sSpiral spring + Stell braid + PU Quilt + Nylon braid
Velocity of Propagation	76%
Operating Frequency	26.5GHz
Impedance	50Ω
Min. Bending Radius	50mm
Insertion Loss(Max.)	2.52dB/m@26.5GHz
Shielding Effectiveness	<-90dB
Phase Stability over Flex.	±2°@26.5GHz
Amplitude Stability over Flex.	<±0.04dB@26.5GHz
Operating Temp.	23±5°C
Storage Temp.	-40~+50°C

Connector Code

Type SMA Male
P/N SMA -J-29-00
Code 01
Mat. Stainless steel
Freq. 26.5GHz
VSWR 1.20:1

Type SMA Female
P/N SMA-K-11-00
Code 02
Mat. Stainless steel
Freq. 26.5GHz
VSWR 1.20:1

Type 3.5 Male
P/N 3.5-J-22-00
Code 47
Mat. Stainless steel
Freq. 34GHz
VSWR 1.25:1

Type 3.5 Female
P/N 3.5-K-04-00
Code 60
Mat. Stainless steel
Freq. 34GHz
VSWR 1.25:1

AT40 Series DC~40GHz

VA Armor Protected Test Cable Assemblies

(Qualified by over 20K flex cycles, well suited for repeat tests)

Features & Advantage:

- Flexible & durable, long life cycle
- Reinforced connector, robust protection & ideal strain relief
- Multilayer armor structure to prevent cable from water, dust, extrusion & distortion
- Excellent phase & amplitude stability over bending, shaking & torsion
- Ideal VSWR & measurement accuracy

Part Numbering Code

AT40 – 40 – 40 – 1M

- *Length (in meter)*
- *Connector code of end B*
- *Connector code of end A*
- *Cable code*

Application:

- Millimeter wave test
- Point to point equipment test
- 5G test

Electrical:

Outer Diameter	6mm
Armor Structure	Spiral spring + Stell braid + PU Quilt + Nylon braid
Velocity of Propagation	74%
Operating Frequency	40GHz
Impedance	50Ω
Min. Bending Radius	50mm
Insertion Loss(Max.)	2.92dB/m@40GHz
Shielding Effectiveness	<-90dB
Phase Stability over Flex.	±3°@40GHz
Amplitude Stability over Flex.	<±0.06dB@40GHz
Operating Temp.	23±5°C
Storage Temp.	-40~+50°C

Connector Code

Type	2.92 Male
P/N	2.92-J-15-00
Code	40
Mat.	Stainless steel
Freq.	40GHz
VSWR	1.25:1

Type	2.92 Male
P/N	2.92-J-15-00A
Code	400
Mat.	Stainless steel
Freq.	40GHz
VSWR	1.25:1

Type	2.92 Female
P/N	2.92-K-09-00
Code	46
Mat.	Stainless steel
Freq.	40GHz
VSWR	1.25:1

Type	2.92 Female
P/N	2.92-K-09-00A
Code	460
Mat.	Stainless steel
Freq.	40GHz
VSWR	1.25:1

AT50 Series DC~50GHz

VA Armor Protected Test Cable Assemblies

(Qualified by over 20K flex cycles, well suited for repeat tests)

Features & Advantage:

- Flexible & durable, long life cycle
- Reinforced connector, robust protection & ideal strain relief
- Multilayer armor structure to prevent cable from water, dust, extrusion & distortion
- Excellent phase & amplitude stability over bending, shaking & torsion
- Ideal VSWR & measurement accuracy

Part Numbering Code

AT50 - 39 - 39 - 1M

- *Length (in meter)*
- *Connector code of end B*
- *Connector code of end A*
- *Cable code*

Application:

- Millimeter wave test cable
- Point to point equipment test
- 5G test

Electrical:

Outer Diameter	6mm
Armor Structure	Spiral spring + Stell braid + PU Quilt + Nylon braid
Velocity of Propagation	74%
Operating Frequency	50GHz
Impedance	50Ω
Min. Bending Radius	50mm
Insertion Loss(Max.)	3.29dB/m@50GHz
Shielding Effectiveness	<-90dB
Phase Stability over Flex.	±4°@50GHz
Amplitude Stability over Flex.	<±0.08dB@50GHz
Operating Temp.	23±5°C
Storage Temp.	-40~+50°C

Connector Code

Type	2.4 Male
P/N	2.4-J-08-00
Code	39
Mat.	Stainless steel
Freq.	50GHz
VSWR	1.25:1

Type	2.4 Male
P/N	2.4-J-16-00A
Code	391
Mat.	Stainless steel
Freq.	50GHz
VSWR	1.25:1

Type	2.4 Female
P/N	2.4-K-09-00
Code	48
Mat.	Stainless steel
Freq.	50GHz
VSWR	1.25:1

Type	2.4 Female
P/N	2.4-K-16-00A
Code	481
Mat.	Stainless steel
Freq.	50GHz
VSWR	1.25:1

AT67 Series DC~67GHz

VA Armor Protected Test Cable Assemblies

(Qualified by over 20K flex cycles, well suited for repeat tests)

Features & Advantage:

- Flexible & durable, long life cycle
- Reinforced connector, robust protection & ideal strain relief
- Multilayer armor structure to prevent cable from water, dust, extrusion & distortion
- Excellent phase & amplitude stability over bending, shaking & torsion
- Ideal VSWR & measurement accuracy

Part Numbering Code

AT67 – 0P – 0Y – 1M

- 1M — *Length (in meter)*
- 0Y — *Connector code of end B*
- 0P — *Connector code of end A*
- AT67 — *Cable code*

Application:

- Millimeter wave test cable
- Point to point equipment test
- 5G test

Electrical:

Outer Diameter	6mm
Armor Structure	Spiral spring + Stell braid + PU Quilt + Nylon braid
Velocity of Propagation	80%
Operating Frequency	67GHz
Impedance	50Ω
Mini. Bending Radius	50mm
Insertion Loss	6.2dB/m@67GHz
Shielding Effectiveness	<-100dB
Phase Stability over Flex.	±3°@67G
Amplitude Stability over Flex.	<±0.15dB@67G
Operating Temp.	23±5°C
Storage Temp.	-40~+50°C

Connector Code

Type	1.85 Male
P/N	1.85-J-07-00
Code	0P
Mat.	Stainless steel
Freq.	67GHz
VSWR	1.25:1

Type	1.85 Male
P/N	1.85-J-07-00A
Code	0P0
Mat.	Stainless steel
Freq.	67GHz
VSWR	1.25:1

Type	1.85 Female
P/N	1.85-K-03-00
Code	0Y
Mat.	Stainless steel
Freq.	67GHz
VSWR	1.25:1

Type	1.85 Female
P/N	1.85-K-03-00A
Code	0Y0
Mat.	Stainless steel
Freq.	67GHz
VSWR	1.25:1

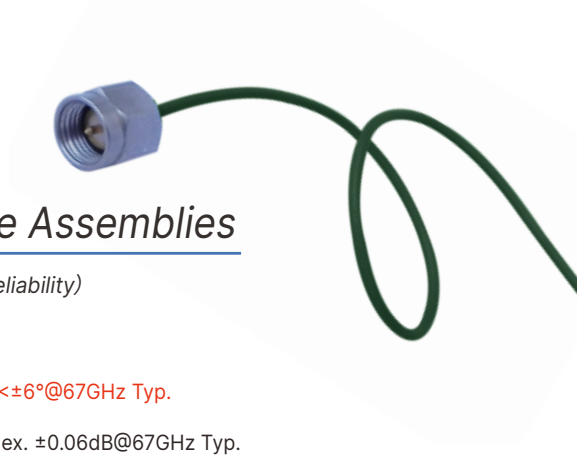

C25F Ultra Flexible & Low Loss .047" Cable Assemblies

(Ideal for connection and jumper requiring extremely limited installation space & high reliability)

Features & Advantage:

- 047" ultra flexible, cable diameter 1.42mm
- 3mm minimum bend radius
- Phase stability over temp. 500ppm@-40~+70°C
- Phase stability over flex. <±6°@67GHz Typ.
- Amplitude stability over flex. ±0.06dB@67GHz Typ.
- Operating temp. -55~+125°C

Part Numbering Code

C25F - 01 - 01 - 1M / PM

- *Special requirement code*
- *Length (in meter)*
- *Connector code of end B*
- *Connector code of end A*
- *Cable code*

**If only one connector requested, one of the connector code can be replaced with '00'*

Code N	Special Requirement
PM	Phase Match
B	Bending
IM3	PIM Test
DE	Delay Line
WA	Interlocked Stainless Steel Armor
VA	Armor with PU/PVC Jacket over Stainless Steel Braid & Spiral
NA	Nylon Braid
M	Water Proof

Cable performance indicators and parameters

Cable Diameter	Weight	Minimum Bend Radius	Impedance	Velocity of Propagation	Shielding Effectiveness	Cut-Off Frequency
1.42mm	5.5g/m	3mm	50Ω	78.7%	<-100dB	143GHz

Attenuation (Typical@25°C) & Power(40°C, Sea Level)

Frequency (GHz)	1	2	3	4	5	6	8	10	12	14	16	18	26.5	30	40	50	67
Attenuation (dB/m)	1.10	1.57	1.93	2.24	2.52	2.77	3.22	3.62	3.99	4.33	4.66	4.96	6.12	6.55	7.69	8.71	10.3
Avg. Power (W)	49.3	34.6	28.1	24.2	21.5	19.6	16.9	15	13.6	12.5	11.6	11	8.9	8.3	7.1	6.3	5.3

Connector Code

Type SMA Male, Tailless
P/N SMA-JD-01-00
Code 011
Mat. Stainless steel
Freq. 26.5GHz
VSWR 1.25:1

Type 2.92 Male
P/N 2.92-J-07-00
Code 40
Mat. Stainless steel
Freq. 40GHz
VSWR 1.30:1

Type 2.92 Male
P/N 2.92-J-24-00
Code 400
Mat. Brass body with stainless steel nut
Freq. 40GHz
VSWR 1.30:1

Type 2.92 Female
P/N 2.92-K-03-00
Code 46
Mat. Stainless steel
Freq. 40GHz
VSWR 1.30:1

Type 2.92 F Bulkhead
P/N 2.92-KY-05-00
Code 42
Mat. Stainless steel
Freq. 40GHz
VSWR 1.30:1

Type 2.4 Male
P/N 2.4-J-06-00
Code 39
Mat. Stainless steel
Freq. 40GHz
VSWR 1.30:1

Type 2.4 Male
P/N 2.4-J-12-00
Code 390
Mat. Brass body with stainless steel nut
Freq. 50GHz
VSWR 1.30:1

Type 2.4 Female
P/N 2.4-K-07-00
Code 48
Mat. Stainless steel
Freq. 40GHz
VSWR 1.30:1

Type 2.4 F Bulkhead
P/N 2.4-KY-01-00
Code 1N
Mat. Stainless steel
Freq. 40GHz
VSWR 1.30:1

Type SMP Male
P/N SMP-J-10-00
Code 36V
Mat. Brass
Freq. 18GHz
VSWR 1.25:1

Type SMP Female
P/N SMP-K-02-00
Code 37
Mat. Brass
Freq. 40GHz
VSWR 1.35:1

Type SMP Female RA
P/N SMP-KW-08-00
Code 383
Mat. Brass
Freq. 18GHz
VSWR 1.30:1

Type SSMP Male RA
P/N SSMP-JW-01-00
Code 0C
Mat. Brass
Freq. 40GHz
VSWR 1.25:1

Type SSMP Female RA
P/N SSMP-KW-02-00
Code 86
Mat. Brass
Freq. 40GHz
VSWR 1.45:1

Type 1.0/2.3 Male
P/N 1023-J-01-00
Code 3C
Mat. Brass
Freq. 18GHz
VSWR 1.30:1

Type 1.0/2.3 Female
P/N 1023-K-01-00
Code 3D
Mat. Brass
Freq. 18GHz
VSWR 1.30:1

Type MCX Male
P/N MCX-J-01-00
Code 27
Mat. Brass
Freq. 12GHz
VSWR 1.20:1

Note: Customized connectors are available on request

C29F Ultra Flexible & Low Loss .086" Cable Assemblies

Features & Advantage:

- Frequency up to 67GHz
- 5mm minimum bend radius
- Phase stability over temp. 500ppm@-40~+70°C
- Phase stability over flex. <±4°@50GHz
- Amplitude stability over flex. <±0.08dB@50GHz
- Operating temp. -55~+125°C

Part Numbering Code

C29F - 01 - 01 - 1M / PM

- Special requirement code
- Length (in meter)
- Connector code of end B
- Connector code of end A
- Cable code

*If only one connector requested, one of the connector code can be replaced with '00'

Code N	Special Requirement
PM	Phase Match
B	Bending
IM3	PIM Test
DE	Delay Line
WA	Interlocked Stainless Steel Armor
VA	Armor with PU/PVC Jacket over Stainless Steel Braid & Spiral
NA	Nylon Braid
M	Water Proof

Cable performance indicators and parameters

Cable Diameter	Weight	Minimum Bend Radius	Impedance	Velocity of Propagation	Shielding Effectiveness	Cut-Off Frequency
2.54mm	16.4g/m	5mm	50Ω	80%	<-100dB	70GHz

Attenuation (Typical@25°C) & Power(40°C, Sea Level)

Frequency (GHz)	1	2	3	4	5	6	8	10	12	14	16	18	26.5	30	40	50	67
Attenuation (dB/m)	0.58	0.86	1.07	1.23	1.41	1.56	1.84	2.09	2.32	2.54	2.75	2.95	3.74	4.02	4.92	5.71	6.20
Avg. Power (W)	155.7	109.1	87.6	76.1	66.2	59.8	52.8	46.5	42.5	38.8	35.9	34.1	27.5	25.6	21.9	18.9	17.4

Connector Code

Type SMA Male
P/N SMA-J502-04
Code 01
Mat. Brass body with stainless steel nut
Freq. 26.5GHz
VSWR 1.25:1

Type SMA Male RA
P/N SMA-JW-05-00
Code 05
Mat. Brass body with stainless steel nut
Freq. 18GHz
VSWR 1.35:1

Type 2.92 Male
P/N 2.92-J-19-00
Code 402
Mat. Stainless steel
Freq. 40GHz
VSWR 1.35:1

Type 2.4 Male
P/N 2.4-J-07-00
Code 39
Mat. Stainless steel
Freq. 40GHz
VSWR 1.35:1

Type 2.4 Male
P/N 2.4-J-13-00
Code 391
Mat. Brass body with stainless steel nut
Freq. 50GHz
VSWR 1.30:1

Type 2.4 Female
P/N 2.4-K-13-00
Code 48
Mat. Stainless steel
Freq. 50GHz
VSWR 1.30:1

Type 2.4 Female
P/N 2.4-K-14-00
Code 481
Mat. Stainless steel
Freq. 50GHz
VSWR 1.30:1

Type 1.85 Male
P/N 1.85-J-02-00
Code 0P
Mat. Stainless steel
Freq. 67GHz
VSWR 1.30:1

Type 1.85 Female
P/N 1.85-K-02-00
Code 0Y
Mat. Stainless steel
Freq. 67GHz
VSWR 1.30:1

Type SSMA Male
P/N SSMA-J-04-00
Code 25
Mat. Stainless steel
Freq. 26.5GHz
VSWR 1.30:1

Type SMP Male
P/N SMP-J-09-00
Code 36
Mat. Brass
Freq. 18GHz
VSWR 1.30:1

Type SMP Male
P/N SMP-J-11-00
Code 36V
Mat. Brass
Freq. 18GHz
VSWR 1.25:1

Type SMP Female
P/N SMP-K-02-00
Code 37
Mat. Brass
Freq. 40GHz
VSWR 1.40:1

Type SMP Female RA
P/N SMP-KW-02-00
Code 38
Mat. Brass
Freq. 26.5GHz
VSWR 1.30:1

Type SSMP Male
P/N SSMP-J-02-00
Code 0B
Mat. Brass
Freq. 40GHz
VSWR 1.45:1

Type SSMP Female BH
P/N SSMP-KY-01-00
Code 0X
Mat. Brass
Freq. 40GHz
VSWR 1.45:1

Type SMMP Female
P/N SMMP-J-01-00
Code 1A
Mat. Brass
Freq. 40GHz
VSWR 1.40:1

Type SMMP Male
P/N SMMP-K-01-00
Code 1B
Mat. Brass
Freq. 40GHz
VSWR 1.40:1

Note: Customized connectors are available on request

C29H *Ultra Flexible and Low Loss .086 Cable Assemblies with Excellent Phase Stability over Flexure and Temp.*

(Ideal for applications requiring extremely limited installation space and high reliability)

Features & Advantage:

- Velocity of propagation 86%, Ultra low loss
- Phase Stability over Flex. <±5°@50GHz
- 5mm Minimum Bend Radius
- Operating Temp. -55~+125°C
- Frequency up to 50GHz
- Amplitude Stability over Flex. <±0.10dB@50GHz
- Phase Stability over Temp. 500ppm@-40~+70°C

Part Numbering Code

C29H - 01 - 01 - 1M / PM

- *Special requirement code*
- *Length (in meter)*
- *Connector code of end B*
- *Connector code of end A*
- *Cable code*

**If only one connector requested, one of the connector code can be replaced with '00'*

Code N	Special Requirement
PM	Phase Match
B	Bending
IM3	PIM Test
DE	Delay Line
WA	Interlocked Stainless Steel Armor
VA	Armor with PU/PVC Jacket over Stainless Steel Braid & Spiral
NA	Nylon Braid
M	Water Proof

Cable performance indicators and parameters

Cable Diameter	Weight	Minimum Bend Radius	Impedance	Velocity of Propagation	Shielding Effectiveness	Cut-Off Frequency
2.57mm	18.4g/m	5mm	50Ω	86%	<-100dB	70GHz

Attenuation (Typical@25°C) & Power(40°C, Sea Level)

Frequency (GHz)	1	2	3	4	5	6	8	10	12	14	16	18	26.5	30	40	50
Attenuation (dB/m)	0.51	0.73	0.91	1.06	1.19	1.32	1.54	1.74	1.92	2.09	2.25	2.41	3.00	3.22	3.81	4.53
Avg. Power (W)	122	86	59	50	44	40	34	32	29	27	25	22	18	16	13	11

Connector Code

Type	SMA Male
P/N	SMA-J-25-00
Code	01
Mat.	Brass body with stainless steel nut
Freq.	26.5GHz
VSWR	1.25:1

Type	SMA Male RA
P/N	SMA-JW-05-00
Code	05
Mat.	Brass body with stainless steel nut
Freq.	18GHz
VSWR	1.35:1

Type	2.92 Male
P/N	2.92-J-10-00
Code	40
Mat.	Stainless steel
Freq.	40GHz
VSWR	1.30:1

Type	2.4 Male
P/N	2.4-J-02-00
Code	39
Mat.	Stainless steel
Freq.	40GHz
VSWR	1.35:1

Type	SMP Female
P/N	SMP-K-02-00
Code	37
Mat.	Brass
Freq.	40GHz
VSWR	1.40:1

Type	SMP Female RA
P/N	SMP-KW-02-00
Code	38
Mat.	Brass
Freq.	26.5GHz
VSWR	1.30:1

Type	SSMP Male
P/N	SSMP-J-02-00
Code	0B
Mat.	Brass
Freq.	40GHz
VSWR	1.45:1

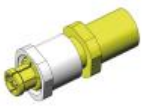

Type	SSMP F Bulkhead
P/N	SSMP-KY-01-00
Code	0X
Mat.	Brass
Freq.	40GHz
VSWR	1.45:1

Note: Customized connectors are available on request

C04I Series DC~26.5GHz

Ultra Flexible & Durable Test Cable Assemblies

(Suited for high precision & long life tests)

Features & Advantage:

- Qualified by over 20K flex cycles
- Qualified by hundred thermal shock testing (-45～+85°C)
- High shielding effectiveness <-95dB
- Excellent phase & amplitude stability
- Ultra flexible
- Cost effectiveness

Part Numbering Code

C04I – 01 – 01 – 1M

- *Length (in inches)*
- *Connector code of end B*
- *Connector code of end A*
- *Cable code*

Cable performance indicators and parameters

Cable Diameter	Weight	Minimum Bend Radius	Impedance	Velocity of Propagation	Shielding Effectiveness	Cut-Off Frequency
4.95mm	60g/m	25mm	50Ω	70%	<-95dB	34GHz

	Attenuation (Typical@25°C) & Power(40°C, Sea Level)												
Frequency (GHz)	1	2	3	4	5	6	8	10	12	14	16	18	26.5
Attenuation (dB/m)	0.37	0.54	0.68	0.80	0.91	1.01	1.19	1.36	1.52	1.67	1.81	1.95	2.59
Avg. Power (W)	285	195	155	132	115	103	87	75	67	61	56	52	39

Connector Code

Type	SMA Male
P/N	SMA-J-04-00F
Code	01
Mat.	Stainless steel
Freq.	26.5GHz
VSWR	1.25:1

Type	SMA Male RA
P/N	SMA-JW-01-00F
Code	05
Mat.	Stainless steel
Freq.	18GHz
VSWR	1.35:1

Type	SMA Female
P/N	SMA-K-04-00F
Code	02
Mat.	Stainless steel
Freq.	26.5GHz
VSWR	1.30:1

Type	3.5 Male
P/N	3.5-J-01-00B
Code	47
Mat.	Stainless steel
Freq.	26.5GHz
VSWR	1.25:1

Type	3.5 Female
P/N	3.5-K-01-00B
Code	60
Mat.	Stainless steel
Freq.	26.5GHz
VSWR	1.30:1

Type	N Male
P/N	N-J-02-00F
Code	07
Mat.	Stainless steel
Freq.	18GHz
VSWR	1.25:1

Type	N Female
P/N	N-K-04-00
Code	08
Mat.	Stainless steel
Freq.	18GHz
VSWR	1.40:1

B12Y Ultra Low Loss Flexible Cable Assemblies with Excellent Phase Stability over Flexure & Temp.

(500ppm@-55~+85°C, ultra low loss 1.39dB@30GHz, suitable for wide temp. phased array radar applications)

Features & Advantage:

- Velocity of propagation 83%, Ultra low loss
- Amplitude stability over Flex. <±0.05dB@18GHz
- Phase stability over Flex. <±3°@30GHz
- Excellent phase stability over flexure & wide temp. range
- Phase Stability over Temp. 500ppm@-55~+85°C
- Operating Temp. -55~+125°C

Part Numbering Code

B12Y – 01 – 01 – 1M / PM

- *Special requirement code*
- *Length (in meter)*
- *Connector code of end B*
- *Connector code of end A*
- *Cable code*

**If only one connector requested, one of the connector code can be replaced with '00'*

Code N	Special Requirement
PM	Phase Match
B	Bending
IM3	PIM Test
DE	Delay Line
WA	Interlocked Stainless Steel Armor
VA	Armor with PU/PVC Jacket over Stainless Steel Braid & Spiral
NA	Nylon Braid
M	Water Proof

Cable performance indicators and parameters

Cable Diameter	Weight	Minimum Bend Radius	Impedance	Velocity of Propagation	Shielding Effectiveness	Cut-Off Frequency
4.9mm	50g/m	20mm	50Ω	83%	<-90dB	30GHz

Attenuation (Typical@25°C) & Power(40°C, Sea Level)														
Frequency (GHz)	1	2	3	4	5	6	8	10	12	14	16	18	26.5	30
Attenuation (dB/m)	0.24	0.34	0.42	0.49	0.55	0.60	0.69	0.78	0.86	0.93	1.00	1.06	1.31	1.39
Avg. Power (W)	875	615	500	431	385	350	301	268	244	225	210	197	159	150

Connector Code

Type	SMA Male
P/N	SMA-J-20-00
Code	01
Mat.	Stainless steel
Freq.	18GHz
VSWR	1.25:1

Type	3.5 Male
P/N	3.5-J-15-00
Code	47
Mat.	Stainless steel
Freq.	26.5GHz
VSWR	1.30:1

Type	N Male
P/N	N-J212Y-00
Code	07
Mat.	Stainless steel
Freq.	18GHz
VSWR	1.25:1

Type	TNC Male
P/N	TNC-J212Y-01
Code	11
Mat.	Stainless steel
Freq.	18GHz
VSWR	1.30:1

Type	TNC Female
P/N	TNC-K-01-00
Code	12
Mat.	Stainless steel
Freq.	18GHz
VSWR	1.30:1

Note: Customized connectors are available on request

B16Y *Ultra Low Loss Flexible Cable Assemblies with Excellent Phase Stability over Flexure & Temp.*

(500ppm@-55~+85°C, ultra low loss 2.85dB@46GHz, suitable for wide temp. phased array radar applications)

Features & Advantage:

- Ultra low loss <2.85dB/m@46GHz
- Phase stability over temp. 500ppm@-55~+85°C
- Operating temp. -55~+125°C
- Amplitude stability over flex. <±0.05dB@40GHz
- Phase stability over flex. <±4°@40GHz

Part Numbering Code

B16Y - 01 - 01 - 1M / PM

- *Special requirement code*
- *Length (in meter)*
- *Connector code of end B*
- *Connector code of end A*
- *Cable code*

**If only one connector requested, one of the connector code can be replaced with '00'*

Code N	Special Requirement
PM	Phase Match
B	Bending
IM3	PIM Test
DE	Delay Line
WA	Interlocked Stainless Steel Armor
VA	Armor with PU/PVC Jacket over Stainless Steel Braid & Spiral
NA	Nylon Braid
M	Water Proof

Cable performance indicators and parameters

Cable Diameter	Weight	Minimum Bend Radius	Impedance	Velocity of Propagation	Shielding Effectiveness	Cut-Off Frequency
3.6mm	33g/m	18mm	50Ω	83%	<-90dB	46GHz

Attenuation (Typical@25°C) & Power(40°C, Sea Level)

Frequency (GHz)	1	2	3	4	5	6	8	10	12	14	16	18	26.5	30	40
Attenuation (dB/m)	0.38	0.53	0.64	0.75	0.84	0.93	1.08	1.21	1.33	1.45	1.56	1.66	2.07	2.20	2.61
Avg. Power (W)	725	520	400	305	265	240	210	188	168	150	135	120	95	90	75

Connector Code

Type	SMA Male
P/N	SMA-J201-08
Code	01
Mat.	Stainless steel
Freq.	26.5GHz
VSWR	1.25:1

Type	SMA Male, self-locking
P/N	SMA-JZ-01-00
Code	01Z
Mat.	Stainless steel
Freq.	18GHz
VSWR	1.35:1

Type	SMA Female
P/N	SMA-K-04-00G
Code	02
Mat.	Stainless steel
Freq.	26.5GHz
VSWR	1.25:1

Type	2.92 Male
P/N	2.92-J-03-00
Code	40
Mat.	Stainless steel
Freq.	40GHz
VSWR	1.30:1

Type	2.92 Female
P/N	2.92-K-01-00
Code	46
Mat.	Stainless steel
Freq.	40GHz
VSWR	1.35:1

Type	2.4 Male
P/N	2.4-J-03-00
Code	39
Mat.	Stainless steel
Freq.	40GHz
VSWR	1.30:1

Note: Customized connectors are available on request

B04 40GHz Ultra Low Loss High Performance Cable Assemblies

(500ppm@-55~+85°C, ultra low loss 2.21dB@40GHz, suitable for wide temp. phased array radar applications)

Features & Advantage:

- Ultra low loss <2.21dB/m@40GHz
- Phase stability over flex. <±3°@40GHz
- VSWR <1.30@40GHz
- Amplitude stability over flex. <±0.10dB@40GHz
- Phase stability over temp. 500ppm@-55~+85°C
- Operating temp. -55~+125°C

Part Numbering Code

B04 - 40 - 40 - 1M / PM

- *Special requirement code*
- *Length (in meter)*
- *Connector code of end B*
- *Connector code of end A*
- *Cable code*

**If only one connector requested, one of the connector code can be replaced with '00'*

Code N	Special Requirement
PM	Phase Match
B	Bending
IM3	PIM Test
DE	Delay Line
WA	Interlocked Stainless Steel Armor
VA	Armor with PU/PVC Jacket over Stainless Steel Braid & Spiral
NA	Nylon Braid
M	Water Proof

Cable performance indicators and parameters

Cable Diameter	Weight	Minimum Bend Radius	Impedance	Velocity of Propagation	Shielding Effectiveness	Cut-Off Frequency
3.7mm	33g/m	18mm	50Ω	82%	<-90dB	42GHz

Attenuation (Typical@25°C) & Power(40°C, Sea Level)

Frequency (GHz)	1	2	3	4	5	6	8	10	12	14	16	18	26.5	30	40
Attenuation (dB/m)	0.32	0.46	0.56	0.65	0.73	0.80	0.93	1.05	1.15	1.25	1.34	1.43	1.76	1.88	2.21
Avg. Power (W)	511	359	290	251	223	203	175	156	141	130	121	114	93	86	74

Connector Code

Type	2.92 Male
P/N	2.92-J-25-00
Code	40
Mat.	Stainless steel
Freq.	40GHz
VSWR	1.35:1

Type	2.92 Female
P/N	2.92-K-13-00
Code	46
Mat.	Stainless steel
Freq.	40GHz
VSWR	1.35:1

Type	2.4 Male
P/N	2.4-J-14-00
Code	39
Mat.	Stainless steel
Freq.	40GHz
VSWR	1.3:1

Note: Customized connectors are available on request

VNA26 Series DC~26.5GHz

Test Cable Assemblies for Vector Network Analyzer

(Suited for high precision & long life tests)

Features & Advantage:

- Negligible changes of phase & amplitude after flexing
- Extra rugged & long-life performance
- Construction is very robust,employing an advanced strain relief system

Part Numbering Code

VNA50 - 47 - 83 - 36

- *Length (in inches)*
- *Connector code of end B*
- *Connector code of end A*
- *Cable code*

Electrical:

Outer Diameter	15.3mm
Operating Frequency	26.5GHz
Impedance	50Ω
Min. Bending Radius	50mm
Insertion Loss(Max.)	2.52dB/m@26.5GHz
Shielding Effectiveness	<-90dB
Phase Stability over Flex.	±2°@26.5GHz
Amplitude Stability over Flex.	<±0.04dB@26.5GHz
Operating Temp.	23±5°C
Storage Temp.	-40~+50°C

Connector Code

Type	SMD3.5 Male
P/N	SMD3.5-J-02-00
Code	47
Mat.	Stainless steel
Freq.	26.5GHz
VSWR	1.20:1

Type	SMD3.5 Female
P/N	SMD3.5-K-01-00
Code	60
Mat.	Stainless steel
Freq.	26.5GHz
VSWR	1.25:1

Type	N Male
P/N	N-J-15-00
Code	07
Mat.	Stainless steel
Freq.	18GHz
VSWR	1.20:1

Type	NMD3.5 Female
P/N	NMD3.5-K-02-00
Code	83
Mat.	Stainless steel
Freq.	26.5GHz
VSWR	1.25:1

Type	NMD3.5 Male
P/N	NMD3.5-J-01-00
Code	0R
Mat.	Stainless steel
Freq.	26.5GHz
VSWR	1.20:1

VNA40 Series DC~40GHz

Test Cable Assemblies for Vector Network Analyzer

(Suited for high precision & long life tests)

Features & Advantage:

- Negligible changes of phase & amplitude after flexing
- Extra rugged & long-life performance
- Construction is very robust,employing an advanced strain relief system

Part Numbering Code

VNA50 – 40 – 0U – 36

- *Length (in inches)*
- *Connector code of end B*
- *Connector code of end A*
- *Cable code*

Electrical:

Outer Diameter	15.3mm
Operating Frequency	40GHz
Impedance	50Ω
Min. Bending Radius	50mm
Insertion Loss(Max.)	2.92dB/m@40GHz
Shielding Effectiveness	<-90dB
Phase Stability over Flex.	±3°@40GHz
Amplitude Stability over Flex.	<±0.06dB@40GHz
Operating Temp.	23±5°C
Storage Temp.	-40~+50°C

Connector Code

Type	SMD2.92MM Male
P/N	SMD2.92-J-01-00
Code	40
Mat.	Stainless steel
Freq.	40GHz
VSWR	1.25:1

Type	SMD2.92 Female
P/N	SMD2.92-K-01-00
Code	46
Mat.	Stainless steel
Freq.	40GHz
VSWR	1.25:1

Type	NMD2.92 Male
P/N	NMD2.92-J-01-00
Code	0V
Mat.	Stainless steel
Freq.	40GHz
VSWR	1.25:1

Type	NMD2.92MM Female
P/N	NMD2.92-K-01-00
Code	0U
Mat.	Stainless steel
Freq.	40GHz
VSWR	1.25:1

VNA50 Series DC~50GHz

Test Cable Assemblies for Vector Network Analyzer

(Suited for high precision & long life tests)

Features & Advantage:

- Negligible changes of phase & amplitude after flexing
- Extra rugged & long-life performance
- Construction is very robust,employing an advanced strain relief system

Part Numbering Code

VNA50 - 39 - 76 - 36

- *Length (in inches)*
- *Connector code of end B*
- *Connector code of end A*
- *Cable code*

Electrical:

Outer Diameter	15.3mm
Operating Frequency	50GHz
Impedance	50Ω
Min. Bending Radius	50mm
Insertion Loss(Max.)	3.5dB/m@50GHz
Shielding Effectiveness	<-90dB
Phase Stability over Flex.	±4°@50GHz
Amplitude Stability over Flex.	<±0.08dB@50GHz
Operating Temp.	23±5°C
Storage Temp.	-40~+50°C

Connector Code

Type	SMD2.4 Male
P/N	SMD2.4-J-02-00
Code	39
Mat.	Stainless steel
Freq.	50GHz
VSWR	1.30:1

Type	SMD2.4 Female
P/N	SMD2.4-K-02-00
Code	48
Mat.	Stainless steel
Freq.	50GHz
VSWR	1.35:1

Type	NMD2.4 Female
P/N	NMD2.4-K-02-00
Code	76
Mat.	Stainless steel
Freq.	50GHz
VSWR	1.35:1

VNA67 Series DC~67GHz

Test Cable Assemblies for Vector Network Analyzer

(Suited for high precision & long life tests)

Features & Advantage:

- Negligible changes of phase & amplitude after flexing
- Extra rugged & long-life performance
- Construction is very robust,employing an advanced strain relief system

Part Numbering Code

VNA67 – 0P – 1V – 1M

- 1M: *Length (in meter)*
- 1V: *Connector code of end B*
- 0P: *Connector code of end A*
- VNA67: *Cable code*

Electrical:

Outer Diameter	15.3mm
Operating Frequency	67GHz
Impedance	50Ω
Min. Bending Radius	50mm
Insertion Loss(Max.)	6.2dB/m @67GHz
Shielding Effectiveness	<-100dB
Phase Stability over Flex.	±8° @67GHz
Amplitude Stability over Flex.	<±0.1dB @67GHz
Operating Temp.	23±5°C
Storage Temp.	-40~+50°C

Connector Code

Type	SMD1.85 Male
P/N	SMD1.85-J-02-00
Code	0P
Mat.	Stainless steel
Freq.	67GHz
VSWR	1.25:1

Type	SMD1.85 Female
P/N	SMD1.85-K-02-00
Code	0Y
Mat.	Stainless steel
Freq.	67GHz
VSWR	1.25:1

Type	NMD1.85 Female
P/N	NMD1.85-K-02-00
Code	1V
Mat.	Stainless steel
Freq.	67GHz
VSWR	1.25:1

Fujian MIcable Electronic Technology Group Co.,Ltd

www.micable.cn

+86-591-87382856

sales@micable.cn